UCF

COLLEGE OF ENGINEERING AND COMPUTER SCIENCE

CHARGESPOT

FINAL DOCUMENTATION

FALL 13 - SPRING 14

GROUP 20

THEOPHILUS ESSANDOH

RYAN JOHNSON

EMELIO WATSON

Table of Contents

1 Executive Summary

Today there is a great push for more electronic devices to operate using some kind of wireless technology. This can be seen from RC cars to game controllers to the daily charging of cell phones. Society is becoming less and less wired and this project aims to take that phenomenon one step further with the aid of available technology.

ChargeSpot is used to demonstrate the feasibility of an autonomous electric vehicle charging system for residential use. A vast majority of today's electric vehicles are being charged with a power cable connecting the car to the charging station. The goal of ChargeSpot is to have very little user interaction and no physical connection between the car and the charging station.

We chose to use a highly resonant frequency charging system as our main means of transmitting power wirelessly to the vehicle. Resonant power transfer works by making a coil ring with an oscillating current; this generates an oscillating magnetic field. Because the coil is highly resonant any energy placed in the coil dies away relatively slowly over many cycles. If a second coil is brought reasonably near to it, that coil can pick up most of the energy before it is lost, even if it is some distance away.

This method of wireless energy transfer is much better than capacitive coupling like the high electric field of the tesla coil. This method also allows for more charging current and better efficiency. For this project, the concept was implemented using a PowerWheels electric toy car. Upon successful testing of our design, it can be successfully scaled to meet the charging requirements of a full size electric vehicle.

This project takes aim at the future where electric vehicles will be more abundant and autonomous systems will be widespread. This system even has the capability of being a smart appliance that communicates with a smart grid and charges only when electric energy cost is at a reduced price. Also more parameters can be displayed on the panel and it may even have the capability of being monitored on your smart phone.

2 Project Definition

In the next section we discuss our motivation and goals for this project. We will outline the objectives needed to meet the project's specifications and requirements. Furthermore, we want to discuss the project's functionality and practicality; how does ChargeSpot work?

2.1 Project Motivation and Goals

With electric vehicles slowly becoming a more popular choice among car shoppers due to government incentives and tax breaks, a more user friendly means of charging these vehicles makes economic sense. Remembering to charge your electric vehicle every day is hard enough as it is. And if you forgot to charge it overnight there is a possibility you may not make it to work the next day. An electric vehicle cannot be charged in five minutes and if you do not have a backup means of transportation owning an electric vehicle can prove to be impractical if you continually forget or neglect to recharge it. Having a ChargeSpot charging system will however give you one less thing to worry about, as the system is totally autonomous and there is no need to rely on you remembering to charge it.

Also the task of undoing cables and precisely aiming the plug connector can be a bit cumbersome at times. ChargeSpot is designed to eliminate these concerns and also include added features necessary for peace of mind, such as battery temperature and the charge capacity of the battery being displayed as the battery is being charged. This is a hands-free, intelligent charging system, capable of fully charging your electric vehicle without human intervention. The user simply parks their electric vehicle as they normally would and the rest is taken care of.

Since its discovery, the interest in highly resonant wireless power transfer is growing, as this technology has a wide array of uses in many markets and application sectors. With this feature added to an electric vehicle, it thus becomes more desirable to purchasers, especially those who would rather eliminate the need for power cable connectors. Also, in this new age of smart phones and smart devices, an app can be used to view your car's battery status on-the-go, which already exist in Chevrolet's Volt and the Tesla brand electric car models.

We also believe that this method of charging increases the reliability factor of the vehicle, by eliminating one of the most failure prone component when it comes to electronic devices – the cords and connectors, especially those requiring multiple connecting and reconnecting. In addition, safety would also be enhanced, by eliminating the sparking hazard associated with conductive interconnections. There is no scientific evidence of resonant wireless charging, or even inductive wireless charging, causing harm to humans, animals, or the environment.

2.2 Objectives

After the group came up with this exciting project idea there are a few objectives that we would like to achieve in order to determine if the implementation is successful or not. Efficiency played a major part in us choosing to go with high resonant frequency charging and as a grouped we decided on the added features that would make this an exciting project to work on. After carefully analyzing our project our main objectives include:

- Design and implement a wireless charging system using high resonance frequency charging technology.
- The charging system must be user friendly and have very little user interaction.
- Receiving coil attached to car must be lightweight and properly concealed as to not interfere with the normal safe operation of the vehicle.
- The system should provide a reasonable charging rate, with the ability to minimize charge time by adjusting charge current based on battery level.
- Battery status and temperature displayed on panel using LED displays.
- Proximity status for alignment displayed on panel to guide user using LED displays.
- No physical cable connectivity between car and charge system.
- Proximity sensor capable of detecting car within 5 feet of panel.
- A fail safe shut down switch for added safety.
- System automatically shuts down when battery is fully charged.
- Project should be successfully completed within budget of $600.
- System should charge standard 12V battery to full capacity within 8 hours.
- The weight of the car system should not exceed 2 lbs.
- The efficiency should be at least 20 percent.

2.3 Project Specifications and Requirements

The specifications discussed below are some of the major guidelines that this project has to abide by in order to be successful. Each component in the overall design was given a great deal of thought before being selected. These specifications were arrived at by the individual group member responsible for researching that part.

LED Bar Display	• 16 LEDs at least (minimum 8 red and 8 green) • 10-20mA optimal current
LED Temperature Display	• At least 3 7-segment displays with decimal point • 10-20mA optimal current
Proximity and Sensor	• Range of 5 feet minimum for proximity sensor • 5V supply voltage
Copper Coils	• Lightweight (less than 2lbs each) • 1 foot diameter
DC Power Supply	• Capable of handling up to 3A of current
Temperature Sensor	• Minimal pin usage for MCU • Range of 0°C to 80°C at least
Microcontroller	• Range of 3V-5V supply voltage • Enough pins for sensors and displays (20+)
Wireless Data Connectivity	• Secured syncing (only able to talk to each other) • Minimal pins usage for MCU
Fans	• 2 inches in diameter (for oscillator) 0.06 A • 3 inches in diameter (for control panel) 0.15 A • Able to cool surrounding temperature by at least 20°F
Battery	• UL Listed • 12V, 18Ah minimum
Oscillator	• Withstand upwards of 24V at up to 200kHz
Charge Controller	• Designed to charge a 12V battery • Capable of up to 3A of charging current

Table 2.3.1 – Initial Specifications and Requirements

2.4 Operation

This charging system was designed to be purely hands free and user friendly. It charges the battery embedded within the electric vehicle to full capacity, with a few added features. It functions as an autonomous system as shown in Figure 2.4.1, where the process begins when the car is within 150 feet of the control panel. At around this distance the XBee communication is established between the car and the control panel and the control panel display is actively in proximity mode. As the car begins to pull into the garage or designated parking area, and is within 5 feet of the control panel, a proximity sensor detects the presence of the vehicle. As the vehicle pulls closer to the panel it is guided into position by the led display on the front of the panel which indicates distance to the charging position. The driver continues to proceed forward while observing the visual aid which indicates the distance to proper alignment of both the car coil and the ground coil. The distance from the moment the vehicle is detected to the charge spot is graduated into eight equal segments. Each segment represents one bar on the led display. The green LEDs signals the driver to keep moving forward until the red indicator LED comes on telling the driver to stop; further explanation is given in Section 4.3 MCU Display.

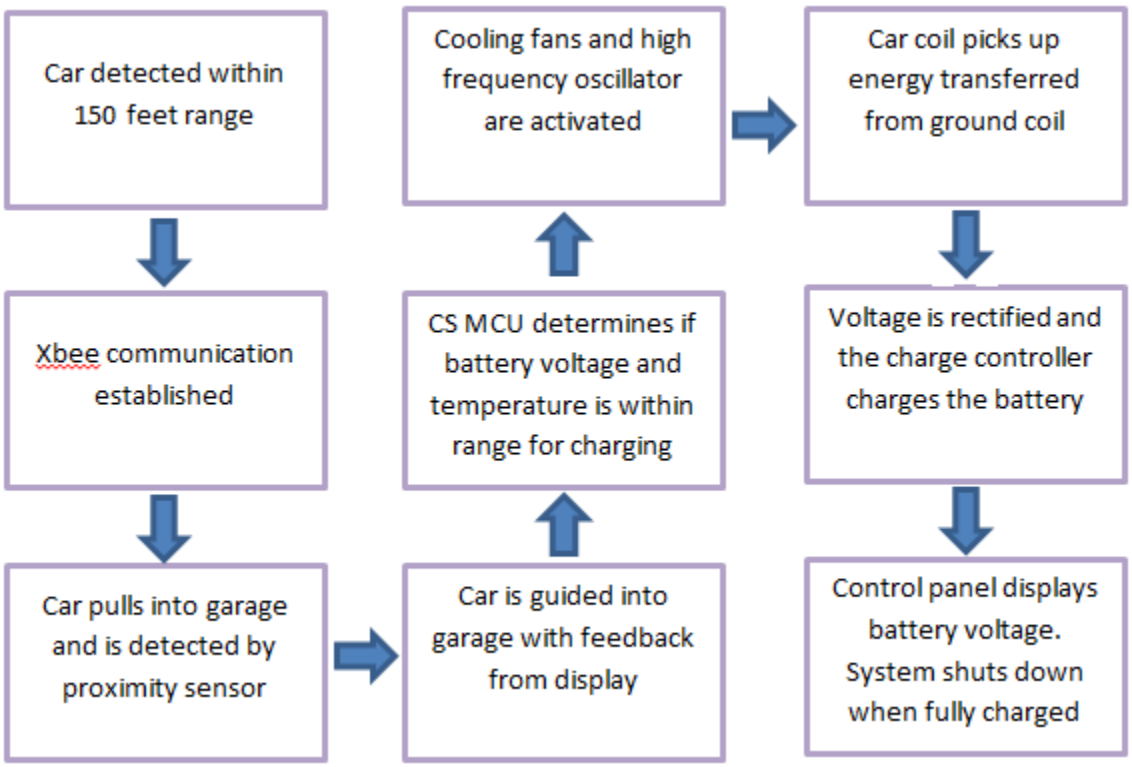

Figure 2.4.1 - Flow diagram for Charging System

The battery voltage is checked to ensure that it is less than 13.5 Volts. Also the temperature of the battery is checked to ensure that it is within the charging range of 50 to 130 degrees Fahrenheit. Once these conditions are met the oscillator will be activated along with the cooling fans for the control panel and the oscillator. The receiver coil mounted to the underside of the car picks up the high frequency energy and it is then rectified and passed through a buck converter. The buck converter takes the high voltage low current dc signal and converts it to 16V at a higher current which is needed to charge the battery at a higher rate. The power conversion efficiency of the buck converter is 90%.

The voltage is then passed to the charge controller which effectively charges the battery. While the battery is being charged the led display on the control panel displays the battery voltage while the leading led flashes at a constant rate. Whenever the battery is fully charged all LEDs are illuminated solid green and shortly afterwards the charging system will shut down.

In the event the car is moved out of position before the battery is fully charged, the system is intelligent enough to detect this condition and shut down the oscillator and place the charging system back in standby mode.

Power On Self-Test (POST)

To ensure that all LED's are operational, the control panel incorporates a self-test feature whenever the system is powered on from a de-energized state. All LED's illuminate in a sequence and this tells the user whether or not an LED needs to be replaced or the system may need to be serviced.

System Reset

If abnormal operation is observed, it may be necessary to perform a system reset. This can be achieved in 3 ways;

1. Pressing the reset button located on the back of the control panel PCB.
2. Pressing the reset button located on the car system's circuit board.
3. Manually shutting down the system using the emergency shutdown switch located on top of the control panel and reactivating it.

3 Research

In order for us to get a broad knowledge on the project; we researched into similar wireless car charging project that has being performed or has been finished. We explored into projects that were being designed or has been developed from several engineering associations, like Society of Automotive Engineers (SAE International), companies like WiTricity, and other government projects.

3.1 SAE International

The reality of having an in-motion charging technology for motorsports like NASCAR and Formula One may be possible; even for electric vehicles. The idea of not having to stop at the pit for fuel is an ideal scenario for motorsports. Not stopping on a road trip or on your way to work could also be very beneficial to electric car users.

Inductive power transfer (IPT) was developed by a HaloIPT (U.K.–based start- up); IPT was developed purposely for electric vehicles that require wireless charging. HaloIPT was founded in 2010 by the New Zealand-based R&D commercialization company UniServices, Trans-Tasman Commercialization Fund, and design consultancy Arup); the company has recently formed a planned partnership with Drayson Racing Technologies to develop an electric drive train package to replace a racecar's internal-combustion engine and also to test their IPT Technology on the race track.

The initial idea is that a transmitter will be buried underneath the surface of the road, or racetrack in the case of a racecar; the transmitter will then supply power to a receiver pad with a controller that is installed under the car. The controller converts the magnetic energy to DC power to charge the battery of the racecar. Dr. Anthony Thompson, Chief Executive at HaloIPT, explains in more detail:

> *"Power is transferred by tuning the pick-up coil to the operating frequency of the primary coil with a series of parallel capacitors. The power transfer is controllable with a switch-mode controller. In an electric vehicle, IPT wireless charging uses strongly coupled magnetic resonance to transfer power from a transmitting pad on the ground to a receiving pad on the car."*

Because installing the charge circuit beneath millions of miles of established roadways will be very costly and time consuming, the two companies decided to perform and test this technology on a short, confined surface at the racetrack. In order to maintain a continuous charge a pad will have to be placed one per linear meter with a gap of 250mm between each pad; so that there would be 100pads/100m. There can be up to 400mm gap between the vehicle and the pad; the vertical gap is also automatically adjusted by the IPT system, when adjustment

is needed. According to HaloIPT, “The literal alignment between vehicle and pad can be ±250 mm (9.8 in) with minimal loss of efficiency.”

This technology follows the International Commission on Non-Ionizing Radiation Protection (ICNIRP) guidelines because the system emits a very low magnetic field that does not interfere with the electronics within the vehicle. Late last year there was a Citroen C1 converted by Electric Car Corporation demonstrated in London. There was also an electric Phantom launched at the Geneva Motor show in March that demonstrated a 7kW system for a larger car featured on the Rolls-Royce 102EX. There is an expectation to deploy a new 18kW product that will be suitable for electric vehicles like taxis, delivery vans, and trucks.

Thomson said “IPT is a vehicle agnostic technology and can therefore be used to power any electric vehicle regardless of size and weight. HaloIPT’s system allows cars, vans, buses, and trucks to travel along the same stretch of IPT highway, with each vehicle harvesting the appropriate amount of energy, controlled from within the vehicle.” For the past ten years in Turin and Genoa, Italy, HaloIPT system which has power levels up to 60kW, are being successfully used in about 40 buses. HaloIPT system can be compared to a plug-in system because it takes the same amount of time to recharge a battery; the bigger the battery the longer it takes for the recharging. It will take five hours for a 3kW IPT system to charge a 15kWh system.

Many co-operations and public sector bodies like Transport for London (the local government body responsible for most aspect of transport system in London), TSB CABLED (the U.K.’s largest trial of Electric Vehicle), and Oxford Brookes University have been working with HaloIPT to help create more wireless electric charge (inductive charging) vehicles to introduce into the mainstream.

There is an estimate of 70,000 units of wireless electric vehicles to be produce by 2015, because of this estimate there have been a recent agreement between a manufacture of lithium-ion battery packs for electric vehicle (Evida Power Ltd) and HaloIPT to jointly manufacture about 40,000 IPT system over a five-year period. Thomson said, “We are now working tirelessly with numerous government bodies and private companies to define infrastructure development, which represent the key next stage of development for charging network implementation. There is a need for government and private-public partnerships to deploy the infrastructure to encourage the production of electric vehicle with smaller battery packs.”

Wireless charging of electric vehicles is becoming more popular due to high demand of clean energy. Companies like HaloIPT inspired us to learn, and work with this technology. If it can be eventually placed in all roads, to charge all future electric vehicles everywhere, think what else this technology holds for the future, and we wanted our project to branch off, or at least be a part of its growth.

3.2 WiTricity

A little over a century ago, Nikola Tesla had an idea of transmitting power through air by using the earth's ionosphere. In terms of wireless power transfer, the frequency of some electromagnetic (EM) fields is the most used method to transmit or send the energy to where it's needed. In order for a detector to receive photons from the high frequency end of the spectrum, an optical technique is used. This technique uses laser to send power via a collimated beam of light to a remote detector where the photons are converted into electrical energy. There is a possibility of transmitting over a long range distance using this technique but there will be the need of complicated tracking and pointing devices to sustain proper alignment between a moving transmitter and receiver. Radiated electromagnetic fields from an appropriate antenna can also be used at a microwave frequency to transmit power over a long range.

There is a common set of functional blocks when it comes to application-wireless energy transfer based on HR-WPT that extend power levels of smaller watts to a level of multiple kilowatts. Figure 3.2.1 below shows a general diagram for HR-WPT system and Table 3.2.1 explains each block.

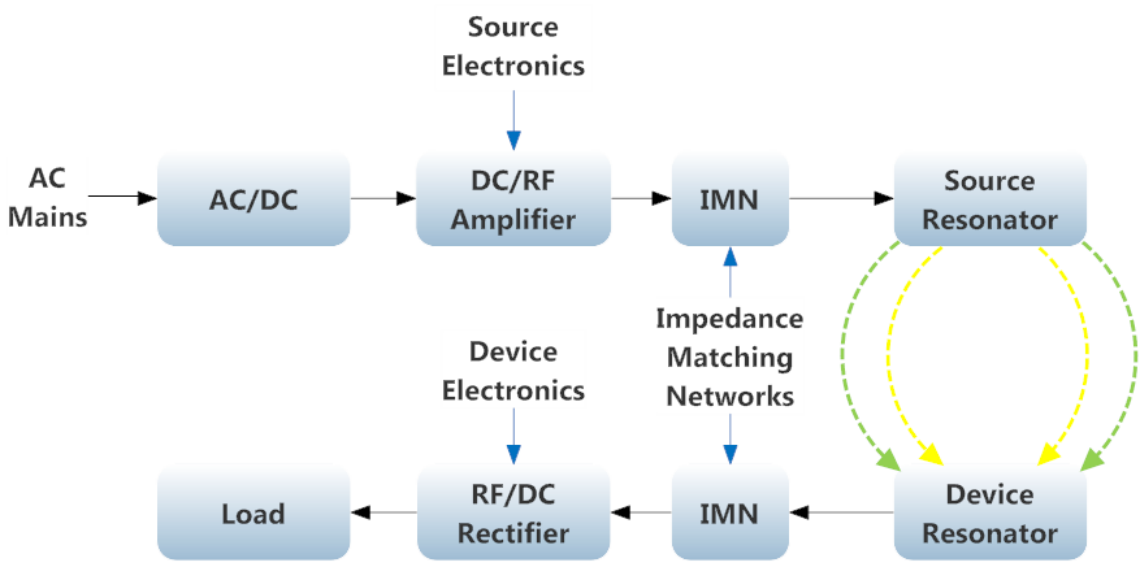

Figure 3.2.1 - Block diagram of a wireless energy transfer system

Inductive coupling into the source resonator and out of the device resonator was used in the earlier work at MIT to achieve impedance equivalence. There was an alignment between the source input coupling coil and the source resonator and also between the device output coupling coil and the device resonator to adjust or alter the input and output impedances. Optimum power efficiency was also possible to achieve by properly adjusting the coupling values.

AC Mains	This is the power that comes from the plug on the wall in the garage or house.
AC/DC	Converts the AC to DC; power factor correction may be included in this block when using a high power application.
DC/RF Amplifier	At this stage a high efficiency switching amplifier is used to convert the DC voltage into a Resonance Frequency voltage wave form, which is used to drive the source resonator.
Impedance Matching Network (IMN)	This is often used to efficiently couple the amplifier output to the source resonator while enabling efficient switching-amplifier operation. It also serves to transform the source resonator impedance, loaded by the coupling to the device resonator and output load, into such impedance for the source amplifier.
Source Resonator	Generates a magnetic field to the device resonator; that causes energy to build up in the device resonator.
Device Resonator	Transfers the buildup energy within it to a load or a charging battery.
Second IMN	Used to efficiently couple energy from the resonator to the load.
RF/DC Rectifier	Converts the AC power received back into DC for a load that requires DC voltage.
Load	This is what we're powering through wireless energy transferring; usually charging a battery.

Table 3.2.1 - Explanation of Figure 3.2.1

WiTricity is known for their wireless energy transfer products, most notably the wireless cell phone charging pad. Simple-to-use devices and products like this is what we aim for when designing and building a prototype for ChargeSpot. Ideally we want an easy, convenient product for consumers that will make that daily routine easier. We are essentially making a giant cell phone charging pad, but for a heavier load, being an electric vehicle's battery. WiTricity has great insight for what we're doing, as holds the basis for our idea for construction and design.

3.3 Relevant Technologies

Wireless power transfer dates back to the days of Nicola Tesla so the idea is not entirely new. In fact the operation of a transformer can be considered a form of wireless power transfer as it functions on the principle of electromagnetic induction to transfer power from the primary coil to the secondary coil. When considering our goal of wireless charging, there are two prominent methods on the wireless transfer of energy: inductive coupling and magnetic resonance.

3.3.1 Inductive Coupling

When current passes through a current carrying conductor a magnetic field is created around this conductor and inductive coupling makes use of this effect. Turning this conductor into a coil amplifies the magnetic field. A larger coil of more turns results in a larger magnetic field. If a conducting wire or a second coil is placed in this magnetic field, a current is induced in this wire. Inductive chargers, such as those found commonly in electric toothbrushes, operate on this same principle. Figure 3.3.1 shows the inductive coupling method. The efficiency of these systems is greatly reduced if the primary coil and the secondary coil are not located in very close proximity to each other. Also, they must be carefully positioned to allow for maximum magnetic coupling between both coils else there will be substantial energy losses.

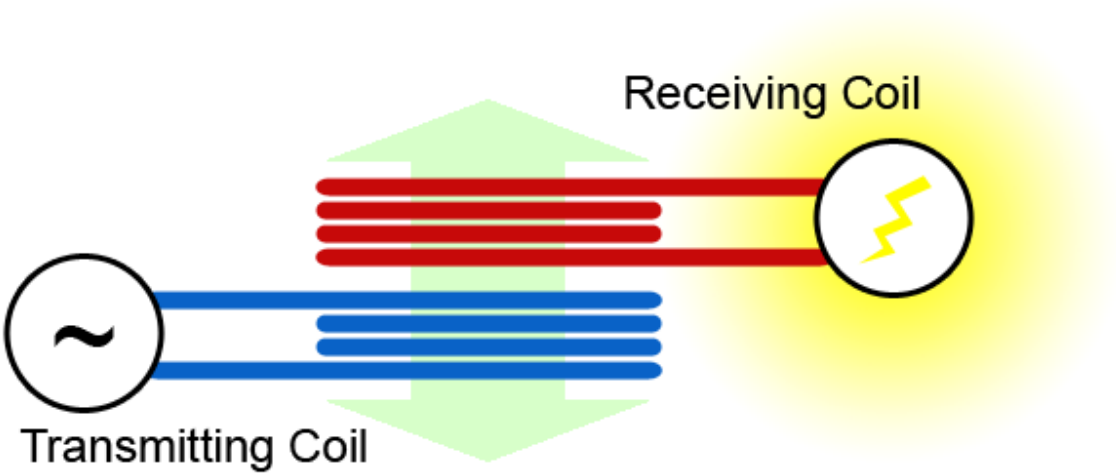

Figure 3.3.1 – Inductive coupling method

3.3.2 Magnetic Resonance

Transferring power at a greater distance using the inductive coupling method proved to be somewhat impractical as this would require a great deal of power. A larger, much stronger field from a transmitter coil could induce current into a receiver coil from farther away, but the process would be extremely inefficient. Since a magnetic field spreads in all directions, making a larger one would waste a tremendous amount of energy.

In November 2006, a few researchers at MIT discovered an efficient way to transfer power between coils separated by a few meters. The team developed a theory that extended the distance between the coils by using resonance frequency. This is a nonradiative approach, and by using resonance the efficiency of the energy transfer is greatly enhanced. It is also important to note that this method

of energy transfer has the ability to maintain a high efficiency, not only over a range of distances, but also with positional and orientational offsets. Figure 3.3.2 below shows the magnetic resonance method in which energy transfer at greater distances and/or with more positional freedoms depicted.

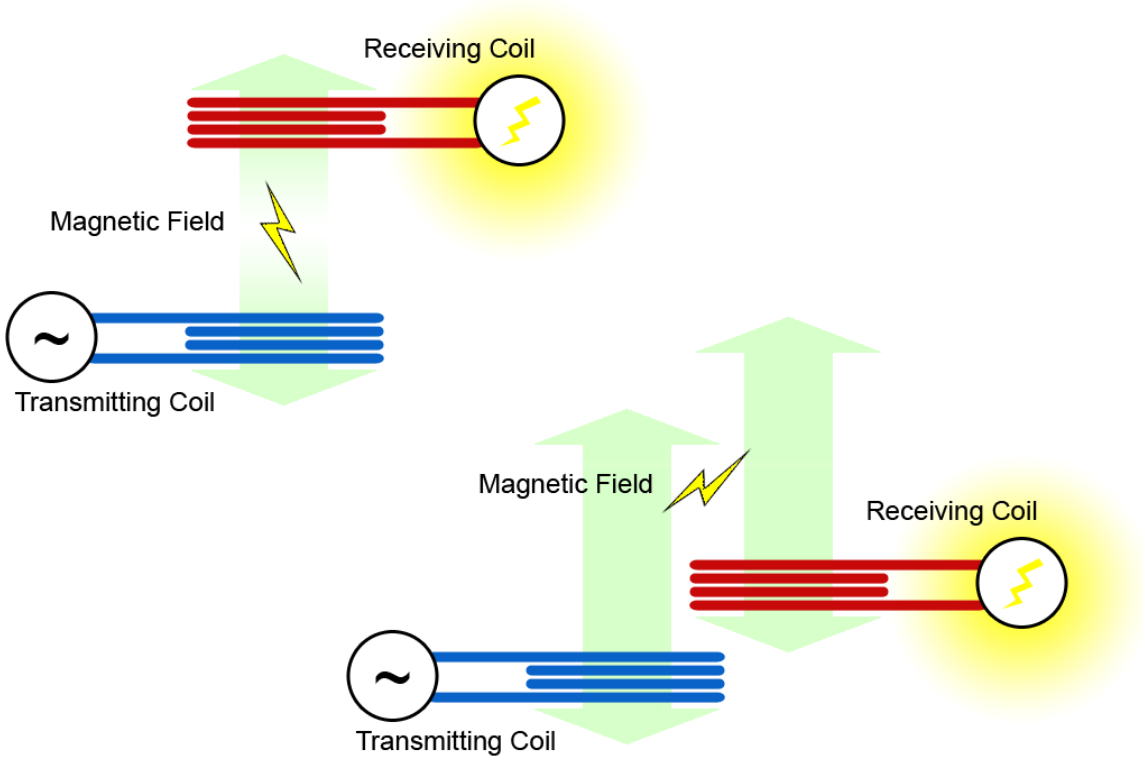

Figure 3.3.2 – Magnetic resonance method

The primary reason we chose to use the magnetic resonance method for our project was due to its high efficiency rating. Even though we will have to deal with energy losses in our charging system this method enables the project to be more practical and comparable to directly connecting the power cable of a standard charging station to the vehicle. The second reason why we chose this method is the fact that it allows for orientational and positional flexibility. Since, the car will be driven into alignment by a human; there is no certainty that the vehicle will be precisely positioned every single time. Having the flexibility to be slightly out of alignment and still capable of maximum power transfer enables this method to be best suited for our application. Thirdly, the distance feature of the resonant frequency power transfer method, gives us the benefit of mounting the receiver coil to any vehicle with little to no restrictions on the height clearance beneath it, provided that both coils are within range of each another.

3.4 Strategic Components

In order for this project to be realized we had to use our knowledge gained from relevant coursework to prescreen various components necessary to perform the functions needed. First of all we need a car that will be fitted with the car system components. For this project a PowerWheels toy car will be used for demonstration purposes. A receiving coil is mounted to the bottom of the car and its primary purpose is to capture the wireless power transmitted by the ground coil. The receiving coil sends the received power to an AC/DC converter which is basically a rectifier circuit.

The Charge controller now takes this power and optimally charges the battery. We added a temperature sensor and a voltmeter to the system to give reliable feedback of the battery capacity and temperature. As soon as the battery capacity reaches 100%, the charging system will be automatically turned off. If the battery temperature exceeds our predefined nominal value, the charging system will shut down as a safety measure.

The wireless communication between the car and the control panel is handled by an XBee module mounted to our PCB which also houses the microcontroller. There is also a receiving XBee module mounted to another PCB located inside the control panel. The control panel also has a microcontroller used for system shutdown and for displaying the relevant data on the front of the panel.

We have to ensure that our control panel is of suitable size. It must be large enough to fit all the enclosed components and be able to act as the visual aid with the LEDs mounted to it. This panel will also be mounted to the wall, therefore the components inside must clear the four corners to allow for the mounting apparatus.

The correct turns ratio must be determined for the ground coil as well as the car mounted coil. In order for these coils to be securely mounted, we plan on building two molds, placing a coil in each mold and pouring fiber glass resin into the molds to cover the coils. When the resin is properly dried mounting holes will be drilled into the fiberglass.

Power for the system will be provided by a DC power supply (battery) capable of 5V for the electronics within the car system, and an AC power supply (outlet) capable of delivering 14V DC for charging purposes and 5V DC for the electronics located in the control panel; AC power supply will go through transformer and rectifier. The 14V will be connected to a high frequency oscillator that oscillates at a predefined resonant frequency, thus ringing the ground coil at the said frequency and allowing wireless power transfer to the car coil.

3.5 Parts Research

Throughout this section we will be looking at possible parts we could've used in the construction of our prototype. The following tables present a general parts list for the ground system (Table 3.5.0.1), the car system (Table 3.5.0.2), and all systems (Table 3.5.0.3). We will discuss each potential part and the part we chose for each subsection. The final parts list (specific parts list) will be listed in Section 6.1 Parts Acquisition. These generic parts lists are the initial parts we're looking for based on previous research. The estimated costs are roughly our budget, but they are high estimates.

Table 3.5.0.1 - Ground System Generic Parts List

Part	***Requirements***	***Est. Cost***
Control Panel	Able to house the displays and electronics	$30
Proximity Sensor	Able to determine range within 5ft, able to work with microcontroller	$10
LED Bar Display	Two-color (green/red), 8 bars, large enough to see	$15
LED 7-Segment Display	At least 3 displays, color preferably red/blue/green, large enough to see	$15
Kill Switch	Push button, able to be mounted to control panel	$5
Power Distribution	Able to supply power to Oscillator (24V), 12V, 5V, 3.3V systems	$30
Oscillator	Able to achieve desired resonant frequency with sufficient power	$15
Fans	12V, able to be mounted in control panel and cool it	$10

Table 3.5.0.2 - Car System Generic Parts List

Part	***Requirements***	***Est. Cost***
Charge Controller	Detect voltage and charge battery, able to work with microcontroller	$15
Buck Converter	>90% efficiency, able to feed the charge controller correct V/A values	$15
Battery	6V/12V, able to run testing vehicle (ideally come with vehicle)	$40
Test Vehicle	Smaller scale than car, battery-powered, able to drain battery	$100

Table 3.5.0.3 - All Systems Generic Parts List

Part	***Requirements***	***Est. Cost***
Temperature Sensor	Range of 0°C to 80°C at least, able to work with microcontroller	$15
Microcontroller	Enough pins and programmable memory, easily programmed	$25
XBee Module	Able to work with microcontroller, quick and secure data transfer	$40
Copper Coil	Appropriate thickness for current needed, rod or coil	$50
Conduit	Able to cover coil/oscillator, able to protect wiring	$10
Assorted Parts	Miscellaneous parts for all circuits	$50

3.5.1 Control Panel

The control is simply a control panel mounted to the wall inside of the garage. This box will house all the major components of the ground system, including the power supply, power distribution, as well as the MCU, shift registers and XBee communication circuit boards. If the garage is susceptible to moisture (for example a carport) then we have to consider a control panel enclosure suited for wet conditions. However, our design assumes that our system will operate in the average garage that is enclosed. Below are a few options that we look into before making a choice.

<u>Junction Box</u>

Vendor	Graybar	Features	• Height: 13.4 in
Manufacturer	Hoffmann Enclosures		• Width:12.94 in
Quantity	1		• Depth: 6 in
Price/Unit	$47.32 (+S&H)		• Continuous hinged
Part Number	88131257		

Table 3.5.1.1

Another option to consider is this steel control panel from DigiKey. Even though it is a bit smaller in terms of dimensions we can still comfortably fit all the necessary components associated with the ground system inside. Another

advantage of using this enclosure is that it has knockout holes which make it easy for us to connect the conduit leading to the coils on the ground.

Steel Junction Box

Vendor	DigiKey	Features	• Height: 10 in
Manufacturer	Bud Industries		• Width:10 in
Quantity	1		• Depth: 4 in
Price/Unit	$ 27.30 (+S&H)		• Hinged door
Part Number	377-1868-ND		

Table 3.5.1.2

The control panel chosen for our design was obtained from a local electronics parts warehouse (SkyCraft). This was a used control panel and we simply had to sanded and painted to render it presentable. The control panel has a robust structure, and has the dimensions capable of holding all the parts we will be using for the ground system. Figure 3.5.1.1 shows the control panel after it was drilled with the required holes and painted.

Figure 3.5.1.1 – Control Panel used

3.5.2 Proximity Sensor

In order for us to choose the right sensor for this project, there are some important factors that we had to take into consideration before choosing the appropriate one for our design. Among all the factors that are recommended for this design, the range and limitation of the sensor is the most basic of them all. If a sensor does not meet this basic requirement, then it must be immediately discarded as a choice for our design. The price of the sensor was also one of the factor's that was

essential in determining the best sensor for our design. Because we are funding our own project we had to stay within a fixed budget in order to minimize any excess expenses. Thus, it is necessary that each sensor that is selected is not only based on optimum capabilities with our design but also within our budget range.

Sound navigation and ranging was the original acronym for sonar; it is also referred to as acoustic sensing or ultra-sonic sensing. Passive sonar and active sonar are the two main technologies that share the name sonar. Passive sonar is basically listening for sound created by vessel, and active sonar is emitting pulses of sounds and listening for echoes. The frequencies used in acoustic locations may vary from very low (infrasonic) frequency to extremely high (ultrasonic) frequency. The time lapse between when the frequency is transmitted and when it received is also very relevant to our project because we need our wireless electronic vehicle to be at certain location and range before charging. This time factor is also important because we need the sensor to be able to detect and alert the charge system about the approaching vehicle.

The minimum and maximum range the sensor can detect an object is also very crucial to our project. We don't want the vehicle to get too close to our charging spot before the sensor detects it; any sensor that does not meet at least the minimum distance of 5 feet is automatically discarded. The typical maximum range of a relatively economical sonar sensor is no greater than 6-25 feet. Among the sonar sensors, ultra-sonic and infra-red looks like a good choice for this project. Due to our budget and cost being an important factor in deciding which sensor to use in the wireless ChargeSpot project, our best option is to buy the least expensive sensor while still maintaining an adequate range for detecting purposes. The least expensive ultra-sonic sensing system costs between $10 and $50.

Because of the delicacy of ultra-sonic sensing, it is easier to miscalculate the distance between the object and the sensor. Unless the object being detected—in this case an automobile—is directly in front of the sensor and perfectly flat, there will be a miscalculation in the distance to the object. If the detected object is at a sharp angle there will be no guarantee that the reflected wave will reach the receiver. Reception and transmission of sound can be interchanged or alternated by a special type of sonic transducer called UEDK 20; it is normally used as an ultrasonic proximity sensor. What makes this type of sensor special is that, when the transducer emits a sound wave towards an object or target, it switches over to receiving mode in order to be able to receive the reflected sonic wave that is bouncing back from the object. The time it takes between the emitting and receiving of the reflected sonic waves is proportional to the distance of the object from the sensor.

Regardless of color or transparency of the vehicle this highly integrated ultrasonic proximity sensor will be able to detect the vehicle. This sensor will be very useful for our project because there will be no need for us to write a program or code for

each color type of vehicle. That will certain reduce some of our work load. There is isolated housing for both the emitter and the receiver. When a sonic wave signal is propel from the emitter, it will keep propagating until it hit a target or an object and the reflected sonic wave is picked up by the receiver. After the reflection beam is detected the receiver then reacts to give an output. Because of its range it did not look like a possible choice for our ChargeSpot project; it an ideal sensor for application that requires minimum distance. It is only possible to sense a target within a conic region produce from the emitter. Although it initially comes with a minimum range; the required sensing range can be adjusted with the built-in potentiometer. We can also customize our specification of this sensor if we choose it, because the operation range can be adjusted and the output function will be selected. There is a built-in LED that helps to indicate when an object is within the set area of detection by changing it state.

Among all the sensors that we had researched; infrared looked like our best logical choice for our charged spot project. It is not only compatible with Arduino-boarded microcontrollers but also other controllers such as PICAXE, PIC, and Parallax. This sensor can be used efficiently for most indoor application where no important ambient light is present. Because we want to element other factors like wind or weather change; our project is going to be design purposely for indoor charging. The IR proximity sensor uses LED's to emit infrared light. The sensor then detects anything that reflects that light back to it. This information is then in turn used to determine proximity of the detected object to the sensor's position. As the range of the sensor being one of the factors or characteristics that we discussed earlier; the cheapest one we found was within the price range of $5 to $10. It was a very good price because that fitted perfectly into our budget, but one of the problems with this price of sensor is its range. The highest range at that price, range no more than 25 to 35 centimeters. Although the range can be extended by increasing the amount of current into the LED; we noticed that our range will still be limited since there is a maximum current that can be generated into the IR sensor. Increasing the current in this type of sensor is going to require more power which will reduce the efficiency of our system. So we decided to increase the price for the type of sensor we are going to use in our budget.

We noticed that the infrared proximity sensor for our project should be able to detect objects from ranges between 100 to 150 centimeters. The amount of ambient light within the area where the object is to be detected can have effect on the range of an infrared proximity sensor. The more the ambient light within the vicinity of detection the less the effective the sensor becomes. This means that if we set up our ChargeSpot in an open area, the IR sensor would have been a very wrong choice especially for sensing during daytime. The headlight of the car can also create significant amount of ambient light that could cause problem with the sensor. This problem can be fixed with an ambient light ignoring sensor which can work in conjunction with the proximity sensor or we can back the car into the garage. This type of proximity design uses a pair of LEDs; one of the LEDs emits the light and the other detects the reflected light. The problem with this design is

that the LED emitting light must be constantly emitting light and therefore be constantly on and active. This constant emission will reduce the battery life of the sensor and severely impede energy efficiency.

Although this is a problem we have a way to rectify this problem; we can be designed to send IR pulse from the transmitter instead of constant emission. The price of this type infrared proximity sensor is reasonably inexpensive and it fits perfectly in our budget; a typical price of a long range infrared proximity sensor ranging from $20 to $30 per sensor. The low cost is not the only advantage of using this IR proximity sensor, but a few parts are required to build this type of sensor. Although this is very beneficial to our project we noticed a few problems that we might run into. One of the problems was finding parts for the circuit.

Another variation of an infrared sensor is PIR or a passive infrared sensor. This type of infrared proximity sensor is essentially a motion detector and is the same type of technology that is used in most companies or industrial security motion detectors system, but this isn't for measuring actual distance. Due to the high cost, we will not be considering a laser sensor (LiDAR). The proximity sensor is fixed to a position that requires the least amount of range; attached to the bottom of the control panel in order to be aimed at the vehicle.

<u>Ultrasonic Ranging Detector Mod HC-SR04</u>

Vendor	Amazon	Features	• 1in to ~90in range
Manufacturer	SainSmart		• Sonar Sensor
Quantity	1		• Online Code Support
Price/Unit	$5.50 (+S&H)		

Table 3.5.2.1

This HC-SR04 ultrasonic sensor is ideal for our project (super cheap and easy to setup with the microcontroller). Range maxes out a little over 8 feet, with minimum range being 1 inch and resolution of 1 inch. It uses 5V input, and includes a trigger pin and echo pin, for activation and data transfer from/to the microcontroller. We chose this after our original proximity sensor didn't work out for our designs (the infrared sensor below). Despite obvious issues with sound reflection off a non-ideal surface (the front of the vehicle), for its price, it did its job well, and problems with it were fixed by modifying the code to be more "lenient" in sensing distance.

IR Distance Sensor (GP2Y0A02YK)

Vendor	Adafruit Industries	Features	• 8in to 60in range
Manufacturer	Sharp		• Infrared Sensor
Quantity	1		• JST Connection
Price/Unit	$15.95 (+S&H)		

Table 3.5.2.2

A plug-in-play type of component from Adafruit, this infrared sensor was perfect for our prototyping purposes and easy to use. Its range is fine for what we will be dealing with: 20cm to 150cm (about 8in to 60in). It uses a JST interface with three wires: power, ground, and analog out. The sensor itself runs on 5V and the analog out ranges from 3V to 0.4V. However, despite the advertised range values, our sensor did not pick up anything beyond 2 feet. We then quickly bought the ultrasonic sensor mentioned above.

3.5.3 Motion Sensor

We originally decided to add motion sensor to this project to prevent wasting too much power; without the motion sensor we would have to use the proximity sensor for object detection, thus it would have to keep sending signal until an object is detected. We planned on using the RK115FCUL00A- ROKONET Cosmos DT 50ft Dual Technology Motion Detector for this ChargeSpot project because it was provided to use for free. The purpose of this motion sensor was to detect an object and send a signal to turn on the proximity sensor if an object is detected. However, before we started prototyping we decided to forgo the use of a motion sensor because it wasn't really saving power (in fact it was using more), it seemed redundant, and it required mounting to the panel (which looked ugly any way you placed it).

3.5.4 LED Bar Displays

Due to the intricacy of the design we had in mind, and the size, we planned to custom make our LED bar displays (not the 7-segment display) using a series of green and red LEDs. We decided to place an LED of each color in each bar (so 1 green and 1 red in each bar). A huge problem we faced was how to control each LED with the available pins with have. The simplest and most inefficient way is to brute force it; connect each LED to a pin. However, we don't have enough pins and possibly not enough power (to have multiple LEDs on at once).

One method we came up with was to use a 4:16 decoder (74154N). Since it outputs inverted signals, the control lines were sent through an inverter, for which 74F04Ds can be utilized (inverters with 20mA output). In actuality, there are six gates per 74F04D chip, so we used three chips for this display. Two 74LS377Ns,

which are D latches, could be used for more control on the LEDs, with its CLK and EN_G pins, but we decided not to include them. This method, however, is quite outdated and despite being power-efficient, it is quite complicated to program with other timings that you have to worry about. So ultimately we came up with another method, this one we implemented into our final prototype. This design only takes 3 pins from the microcontroller, and involves 2 8-bit shift registers (74HC595N) Table 3.5.4.2 shows the vendor stats for the components (order copies for some).

Table 3.5.4.1 - LED Bar Components List

Component	Vendor	Manufacturer	Quantity	Cost per unit
74154N	Mouser	Texas Instruments	2	$4.15 (+S&H)
74F04N	Mouser	Texas Instruments	4	$0.63 (+S&H)
Green LED	Amazon	Bluecell	50	$4.11 (+S&H)
Red LED	Amazon	Bluecell	50	$4.11 (+S&H)
Blue LED	Amazon	Bluecell	50	$4.11 (+S&H)
74HC595	Mouser	Texas Instruments	4	$0.63 (+S&H)

Since we constructed our own displays, we housed the 8 LED bars in a paper/bottle cap setting, and cut for allotted space in the control panel. We used printer paper for the film to put over the bars so that light can shine out but you can't see the inside. The housing for each bar includes 2 LEDs. Since we're using shift registers, there is a possibility that all LEDs can be on, thus drawing the maximum amount of current the system can draw; 320mA at 20mA per LED, but we plan to halve that by using only 10mA per LED.

3.5.5 LED 7-Segment Displays

The 7-segment LED displays are used to display temperature of the battery to the user. The temperature can be displayed in Fahrenheit and Celsius and our design requires at least three separate 7-segment displays. The LED color is not very important (non-white) and the LEDs themselves should be large enough to see, as it's mounted on the control panel. Searching for 7-segment displays we found that the larger the display the price would exponentially increase. We found simple single 7-segment displays that are cheap and small, and would require some work to have them work together, but use many pins. We also found 7-segment displays that are already multiplexed together thus requiring less pin usage, but are also slightly more expensive. To save on even more pins, we used a shift register (like for the bar displays) to derive the 7-segment LEDs.

WaveShare 4-Digit 8-Segment LED Display Tube Board Module

Vendor	DealExtreme (dx.com)	Features	• 4 7-segment displays
Manufacturer	WaveShare		• Easy use/setup
Quantity	1		• Really small
Price/Unit	$6.80 (+S&H)		

Table 3.5.5.1

First to look at is this display module that includes all necessary 7-segment displays, and includes a decimal point. The dimensions are quite small, however, with the entire board being 4.8cm x 2.6cm x .8 cm and for that price it doesn't seem worth it. Although it does come printed on a board with easy-to-connect pins and a test program to make sure the display is working correctly, it just seems you're paying for easy setup than for what you actually want. The pros for this display are its ease of use and connectivity. It also comes with all the displays we need instead on one of each. The one con however outweighs the pros; the display being too small for what we can get with the same price. However this stayed on the backburner as a viable option for a display.

Kingbright BC56-12SRWA

Vendor	Mouser Electronics	Features	• 3 7-segment displays
Manufacturer	Kingbright		• 14.2mm character height
Quantity	1		• Red illumination
Price/Unit	$3.46 (+S&H)		

Table 3.5.5.2

Another display we found is this Kingbright display that is a combination of three 7-segment displays with decimal points. It is white/grey and illuminates red. Unlike the previous display, Mouser is kind enough to give us all the technical specs so choosing a specific part is easier, especially when there are numerous other similar products. This particular Kingbright display uses common anode and runs on 1.85V/20mA and has appropriate operating temperatures for what we need. Dimensions are large enough, 37.6mm x 19mm x 8.1mm and the characters themselves measure 14.2mm in height. The pros here are the price and convenience of the three displays being in one. With the addition of the given data sheets from Mouser and the absence of any noticeable cons, we decided to purchase this display and try it out. We ended up using this in our final prototype.

Adafruit 0.56" 4-Digit 7-Segment Display

Vendor	Adafruit Industries	Features	• 4 7-segment displays
Manufacturer	Adafruit Industries		• 14.2mm character height
Quantity	1		• Variety of colors
Price/Unit	$9.95 (+S&H)		• Easy to use 4-pin header

Table 3.5.5.3

A third option was this Adafruit display. Although the vendor isn't as thorough as Mouser, this display should be very identical to the Kingbright display from Mouser. This one has a white illumination, although many other colors are available, and it has the same character size (14.2mm) as the Kingbright display. The added benefit this display brings is the "easy to use" 4-pin header and the addition of another 7-segment, which isn't a big deal for us since we only require three. The pro for this display is that everything seems to be "plug and play" but the con is the relatively high price. The reason for only having 4 pins is because this display has built-in shift registers, and we didn't chose this one because there wouldn't be much left for us to do.

3.5.6 Kill Switch

The kill switch offers the user a means of power control and also for system shutdown in case of an emergency. Concerns stemming from coil getting too hot or a pet stuck underneath the car can be quickly resolved by simply pushing the kill switch. This action disengages the AC mains from the power supply, thus shutting down the entire system. The switch also offers a sense of user intervention in case of a malfunction, since all aspects of the charging system are automated.

DPST Push Button Switch

Vendor	Amazon	Features	• Voltage: 660V AC Max
Manufacturer	Amico		• Current: 10A
Quantity	1		• Latching action
Price/Unit	$5.38 (+S&H)		• Double pole
			• Hole mounted

Table 3.5.6.1

3.5.7 Fan

The control panel houses a few devices that generate heat and since it will be a closed box under normal operation, provisions must be made to dissipate as much of the heat produced as possible. The box will have vent holes cut in the top and bottom while some of the devices will be mounted to heat sinks. However, to ensure the safe operation of our charging system we are taking the cooling a step further by adding a cooling fan. The fan is mounted to one side of the box and extracts heat by blowing air inside the box and expelling the air out through the vent holes. As soon as the charging system is activated the fans spins at a constant RPM and remains on for the duration of charging. This cheap and simple fan from NewEgg can serve our purpose.

Cooling Fan (EC8010LL05E)

Vendor	NewEgg	Features	• Voltage: 5 VDC
Manufacturer	Evercool		• Current: 0.26 AMP
Quantity	1		• 80 x 80 x 10 mm
Price/Unit	$9.99 (+S&H)		• 2000 RPM
			• High air flow

Table 3.5.7.1

3.5.8 Power Supply

The Power Distribution system which is located inside of the control panel comprises of a number of ICs and diodes listed in Table 3.5.8.1. The transformer is a step down type which converts the AC mains to $24V_{rms}$ which is then rectified by a rectifier chip. It is important to note that parts of the power distribution system will be duplicated to power the devices on the car. This includes the 5V and 3.3V sections. See section 4.2 for further details on the design of the power management system.

The 24VDC output is used as VCC for the oscillator and it is also regulated down to 12V using and LM7812 voltage regulator to power the fans. The LM7805 is a 5V voltage regulator that takes a 12V input from the output of the 12V section. The LM3940 is a 3.3V voltage regulator that takes its input from the 5V section.

The transformer will be an integral part of the power supply circuit. We have to ensure that the output power of the transformer is sufficient to power all the devices and circuitry within the control panel and most importantly the oscillator circuitry which will be supplying the high frequency power to the ground coil. The transformer listed below in Table 3.5.8.2 is capable of producing a maximum

secondary current of 5A and from a design standpoint this is sufficient power. The transformer is made with a double bobbin design therefore no electrostatic shield is required. It is also UL listed with a Hi-Pot test of 2000V RMS.

Table 3.5.8.1 – Power Distributor Components List

Component	Vendor	Manufacturer	Quantity	Cost per unit
PMR27k100	SkyCraft	UNKN	1	$2.00
LM7812	Mouser	Fairchild Semiconductors	1	$0.71 (+S&H)
LM7805	Mouser	Fairchild Semiconductors	2	$0.69 (+S&H)
LM3940	Mouser	Texas Instruments	2	$1.81 (+S&H)

Transformer (166P18)

Vendor	SkyCraft
Manufacturer	UNKN
Quantity	1
Price/Unit	$22.64

Features

- AC input 115V AC
- AC output 24V AC CT
- Sec current: 5A
- Class B insulation
- UL Listed

Table 3.5.8.2

3.5.9 Charge Controller

We needed a charge controller to help protect our battery from overcharging. The reason for the charge controller was for a better performance of our battery and for the battery to have a longer lifespan by preventing overvoltage. Overvoltage could cause poor performance in battery and also hurts the battery's lifespan. Preventing the battery from overcharging also prevented safety issue.

Because we wanted to use a power wheel that operated on 12V battery; we needed a charge controller that was designed purposely for such voltage level. We chose to use a Low Dropout Voltage (LDO) charge controller that uses a simple differential amplifier and a P channel MOSFET linear; it also had an adjustable output voltage that helped our project because we were able to set our output voltage to the required voltage that we need. It was designed for a 5OW (4A nominal and open circuit voltage: 18 to 20V); the output voltage ranges

from 7 to 14 V and the maximum power dissipation is 16W with a typical dropout voltage of 1.2V at 4A. It also has two LED's; one was used to indicate if the oscillator is active and one the other to indicate if the battery is fully charged or topping off. The table 3.5.9.1 below has some of the most important component for this charge controller

Table 3.5.9.1 – Charge Controller Components List

Component	Vendor	Manufacturer	Quantity	Cost per unit
Zener	Mouser	Texas Instruments	1	$0.30 (+S&H)
Transistor	Mouser	ON Semiconductor	1	$0.20 (+S&H)
MOSFET	Mouser	Texas Instruments	1	$1.00 (+S&H)
Rectifier	Mouser	Fairchild Semiconductors	1	$1.04 (+S&H)
Potentiometer	Mouser	Texas Instruments	1	$2.09 (+S&H)

3.5.10 Vehicle and Battery

Our goal in regards to choosing a test vehicle was to acquire a PowerWheels and its battery/charger. This was supposed to be a small-scale test, to show that the idea and logic work. Another option was a golf cart or go-cart, but our budget at that time called for something a lot cheaper and easy to obtain, so our designs was chose to use a PowerWheels vehicle and battery. Looking through Fischer-Price's website, they had numerous kinds of PowerWheels ranging from baby-sized to 2-passenger toddler-sized, and rightfully priced so ($85 to $400+). Our ideal PowerWheels would be a toddler-sized one, preferably a Jeep model, so it can surely hold our car coil and have enough ground clearance, although everything can be "adjusted by force" if needed. We also found five products that are important to note in Table 3.5.10.1 from their site. As you can see they are very expensive vehicles and batteries, so buying directly from the site or store for a new PowerWheels was not a viable option.

Table 3.5.10.1 - Batteries and Chargers from Fischer-Price

Product	Type	Cost
Single Battery Toddler 6V Charger	6V Charger	$22.00 (+S&H)
12V Charger	12V Charger	$45.00 (+S&H)
Toddler 6V Rechargeable Battery	6V Battery	$45.00 (+S&H)
6V Rechargeable Battery	6V Battery	$45.00 (+S&H)
12V Rechargeable Battery	12V Battery	$70.00 (+S&H)

We had to look to other sources to find a PowerWheels we wanted. We initially had a budget for $150, so we decided to look through Craigslist, eBay, Amazon, and Reddit to find something within our price range. We found one for a cheap price but unfortunately for us; the battery was bad so we had to get a new one. The total cost of both vehicle and battery summed up to $119 which was still below our budget.

3.5.11 Temperature Sensor

There are mainly four types of temperature sensors used in modern technology: thermocouples, thermistors, RTDs, and infrared temperature sensors. A thermocouple can measure a huge range of temperatures, and are inexpensive and reliable. Thermistors and RTDs are identical to thermocouples, except they are used for more precise measurements. The infrared temperature sensor can have a variable range and uses the thermal energy from an object's wavelength to convert into signal for temperature; therefore it's non-contact. We ideally wanted either a touching sensor, that is attached to the battery physically, or an infrared sensor, that is mounted close to the battery at the point where we want to measure its temperature.

<u>GE Sensing ZTP-115</u>

Vendor	DigiKey	Features	• Infrared Sensor
Manufacturer	GE Sensing		• -20C to 100C range
Quantity	1		• High Sensitivity
Price/Unit	$3.82 (+S&H)		• Very small

Table 3.5.11.1

This infrared temperature sensor is packaged into a small bottle-cap shaped package with the infrared sensor at the top (diameter is 9.25mm and the height is 3.5mm, not including pin length). Four pins (two grounds) extend at the bottom for connection. This sensor is quite ideal for our setup, considering its precise range, high sensitivity, cheap cost, small size, and as an added luxury, non-touching setup. The sensor outputs voltage based on the object temperature, as shown in Figure 3.5.11.1. However, this is but one small piece in a larger circuit required to get the temperature.

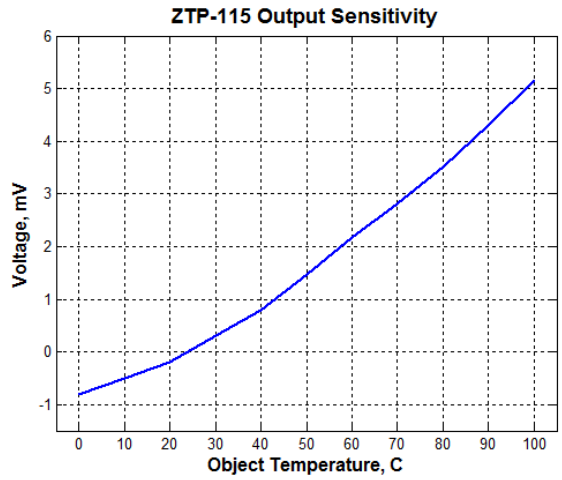

Figure 3.5.11.1 – ZTP-115 Output Sensitivity

Thermistor Sensor Surface-Mount Stick-On (SA1-TH-44000 Series)

Vendor	Omega	Features	• Touching Sensor
Manufacturer	Omega		• -80C to 120C range
Quantity	2		• Re-applicable
Price/Unit	$44.00 (+S&H)		• Long cable

Table 3.5.11.2

This is an alternative approach for temperature sensing, a touching sensor. This sensor uses a thermistor. Installation requires peeling off a strip on the thermistor and applying it to the dry solid surface you want to measure, in our case the battery. The thermistor strip itself measures 19mm by 25mm and about 1mm thick, attached to a two-pronged meter-long wire (ground and output). This setup is easy to integrate into the car system, due to the cable length, but the price was very off-putting.

GE Sensing ZTP-115M

Vendor	Mouser	Features	• Infrared Sensor
Manufacturer	GE Sensing		• -20C to 100C range
Quantity	2		• High Sensitivity
Price/Unit	$11.88 (+S&H)		• Easy setup

Table 3.5.11.3

This brings us to the ZTP-115M. Just like the other GE sensor, this is the module version of the ZTP-115, meaning that all the internal circuitry finds the corresponding temperature sensor as analog V_{out}. This part has the exact same

specifications as the ZTP-115, since it uses it, so Figure 3.5.11.1 applies to this part too. The extra cost is for the ease of use and integration. We purchased and used this part and while testing it, we found the sensitivity curve was off, so we calibrated our program to accurately read the temperature.

3.5.12 Microcontroller

We needed two microcontrollers--one for each main system--to drive the data through and make everything work as intended. The requirements are quite simple for both microcontrollers, so we saved time and energy and got two of the same. The car system microcontroller is only obtaining data from its two sensors (temperature and voltage of the battery) and processing them into an understandable form, then finally sending it through the XBee module. The XBee module will then send the data to the ground system's XBee module, which will send it to the ground system's microcontroller. The ground system's microcontroller will be taking this data and processing it to display the data onto the LED displays and to allow/disallow the oscillator to send current through the coil. We did not need heavy processing microcontrollers.

Atmel ATMEGA32P-PU

Vendor	Mouser Electronics	Features	• 8bit, 32kB memory
Manufacturer	Atmel		• 28 pins
Quantity	1		• 2-Wire, SPI, USART
Price/Unit	$3.76 (+S&H)		• 4.5V - 5.5V supply

Table 3.5.12.1

This 8bit microcontroller seems to be the most simple and most ideal for our uses. It has 32kB of programmable memory, operates between 4.5V and 5.5V, and has appropriate operating temperatures. Having 20 programmable I/Os is ideal for the ground system microcontroller because we used nearly all of them (including the analog pins). It uses USART for interfacing and is programmable through Atmel Studio 6 obtainable from Atmel's website, and also through Arduino IDE with the Arduino UNO development board. We have an Arduino board that comes with an ATMEGA32P that we were playing around with to get a feel for embedded programming. Since we can just pop out the microcontroller from the Arduino board, we can just buy one more to satisfy our microcontroller needs. This part was definitely on top of our list in regards to microcontrollers because we already have one and wanted to gain experience with how to use it, so after thinking about which microcontroller we wanted to use in the prototype, we chose this.

TI 595-MSP430F5529IPN

Vendor	Mouser Electronics	Features	• 16bit, 128kB memory
Manufacturer	Texas Instruments		• 63 pins
Quantity	0		• I2C, IrDA, SPI, UART
Price/Unit	$8.05 (+S&H)		• 1.8V - 3.5V supply

Table 3.5.12.2

This familiar Texas Instrument 16bit microcontroller is the one we used extensively in our Embedded Systems class through the MSP430 Launch board. It has 128kB of programmable memory, operates between 1.8V and 3.5V (ultra-low power), and has appropriate operating temperatures like the ATMEGA. This microcontroller has 63 programmable I/Os, which supports the phrase "It's better to have it and not need it than to need it and not have it." With this many pins we would definitely not have to worry about any amount of LED wiring problems for the displays. It uses UART for interfacing and is programmable through TI Code Composer. Just like the Atmel ATMEGA, this TI MSP430 is a very good choice. If we can find our old Launch boards, we would be able to use those microcontrollers by taking it off the Launch boards and putting it in our own printed circuit board; it means we wouldn't have to buy any. On the other hand, if we can't safely remove the chip, we'll just have to buy two (it is significantly more expensive than the ATMEGA). All of us have substantial experience with TI Code Composer and programming the MSP430 through that class and lab, but we wanted to learn something new.

Atmel ATXMEGA32A4U-AU

Vendor	Mouser Electronics	Features	• 8/16bit, 32kB memory
Manufacturer	Atmel		• 34 pins
Quantity	2		• I2C, SPI, UART
Price/Unit	$4.13 (+S&H)		• 1.6V - 3.5V supply

Table 3.5.12.3

This Atmel 8bit/16bit microcontroller combines the ATMEGA and the MSP430 in certain aspects. The ATXMEGA has two different versions, an 8bit or 16bit (pricing is for 8bit), but we only really need 8bit. It has ultra-low power consumption like and uses UART just like the MSP430, although it is programmed in Atmel Studio 6. It has 32kB of programmable memory and 34 programmable I/Os. This microcontroller option is like meeting in the middle relative to the first two options. This could be viable, although we would definitely need to purchase both since we have none, unlike the first two. This was also a back-up option if we found time to work on a more complicated microcontroller.

3.5.13 Wireless Module

Two wireless modules were needed for the project; one mounted on the ground system and the order mounted on the car system. The car system module will collect data from the microcontroller mounted on the car system then transfer that data to the ground system. We researched into multiple wireless modules in order to get the right module that we needed for the project.

RN41-XV Bluetooth Module

Vendor	Karlsson Robotics	Features	• 3V - 3.5V supply
Manufacturer	Roving Networks		• 35mA receiving
Quantity	2		• 65mA transmitting
Price/Unit	$29.95 (+S&H)		• -40°C to 85°C
			• 2.4 GHz Frequency

Table 3.5.13.1

This RN41XV has a 79 channel at 1MHz intervals with 128 bit encryption of secure communications. This Bluetooth can also be configured through local UART and over-the-air RF. Although this RN41 module is a little above our budget range rang it looks like a good choice for our projected because of it 100 meters range, 16dBm output transmitter and the -80dBm receive sensitivity. It also has a RR transmission power of less than 4dBm and an initial carrier frequency tolerance of 75 KHz. One feature that makes this Bluetooth module unit is the reset circuit that a reset pin which has an optional power-on-reset delay that helps to protect the module is there is uncertain or unstable power up or when there is a very slow ramp in the input power supply.

BC04-B Bluetooth Module

Vendor	Alibaba	Features	• 3V - 3.5V supply
Manufacturer	LM Technologies		• 10mA receiving
Quantity	2		• 20mA transmitting
Price/Unit	$14.95 (+S&H)		• -40°C to 75°C
			• 2.4 GHz Frequency

Table 3.5.13.2

BCO4-B master-slave Bluetooth module is a Class 1, low cost and small size Bluetooth module that does not support only UART but also USB, PCM, SPDIF interface and SPP Bluetooth serial protocol. This feature makes it the ideal Bluetooth for our project. It has a very good short range wireless data transmission

field which will be perfect for your short range data transfer between the two modules that will be mounted on the ground system microcontroller and the car system microcontroller.

XBee Module Series 1

Vendor	Adafruit	Features	• 3.3V supply
Manufacturer	Digi International		• 250kbps Data rate
Quantity	2		• 0dBm Output Power
Price/Unit	$22.99 (+S&H)		• 300ft max range
			• 2.4 GHz Frequency

Table 3.5.13.3

One option for wireless modules is this XBee module which we ended up using. This particular component really appealed to us, because there was a lot of support for this module and our microcontroller online and because a lot of other senior design groups were using it. The only downside is its 3.3V power supply (it's the only component in our designs using this voltage), and we have to accommodate for it. Other than that, it's a really easy to use module that utilizes the microcontroller's TX/RX pins and its serial functions.

3.5.14 Coils

A ground coil and a car coil was used as the energy transfer medium since there is no physical contact between the car and charging system. These coils were handmade into the desired form based on the turns ratio calculated. Copper was the material of choice for the coils. According to our research, we could've use solid copper wire, copper tubing, Litz wire or even Aluminum to make good quality coils capable of producing the needed magnetic field. We estimated that this design will require between 9 to 18 turns of the coil material with a maximum outside diameter of one and a half feet. This brings us to a rough estimate of 50 ft. of conductor. Of course, material availability will dictate the size of the coil.

10 AWG Solid Copper Conductor

Vendor	Home Depot	Features	• Excellent conductivity
Manufacturer	n/a		• Easily terminated
Quantity	50 ft		• Easy to shape
Price/Unit	$45.95 (+S&H)		

Table 3.5.14.1

The solid copper conductor is great for making coils, in fact most coils in everyday electronics is made from it due to its excellent electrical conducting properties. We are most likely going to use solid copper.

3/8 dia. Copper Tubing

Vendor	eBay	Features	• Excellent conductivity
Manufacturer	n/a		• Easily terminated
Quantity	50 ft		• Easy desired shape
Price/Unit	$65.99 (+S&H)		

Table 3.5.14.2

Copper tubing is mostly used for applications such as gas piping or in the HVAC uses. However, due to the properties as mentioned before it was an excellent candidate for making the coils needed for the design.

Litz Wire

Vendor	eBay	Features	• Excellent conductivity
Manufacturer	n/a		• Very flexible
Quantity	50 ft		• Easy to shape
Price/Unit	$38.00 (+S&H)		

Table 3.5.14.3

Litz wire is a type of cable used to carry alternating current in electronics. This wire is designed to reduce the skin effect and proximity effect losses at up to about 1MHz. This would be great for making our coils since we would like our system to be as efficient as possible. The cable consists of many thin wire strands, individually insulated and twisted or woven together in a specific pattern.

Aluminum

Vendor	eBay	Features	• Excellent conductivity
Manufacturer	n/a		• Very flexible
Quantity	39 ft		• Easy to shape
Price/Unit	$9.01 (+S&H)		

Table 3.5.14.4

Aluminum being used as a coil is not uncommon in electronics. However coils wound with aluminum have similar losses and performance as copper coils. Aluminum wire requires approximately 1.6 times as much cross section as copper to carry an equivalent amount of current. Therefore aluminum-wound coils are larger than an equivalent copper coil. Applications such as our design require very tight dimensions and generally require copper coils, so we went with solid copper.

3.5.15 Oscillator

The word oscillator and resonator may be used interchangeably for our purposes. In our design the oscillator is used generate the resonant frequency of the ground coil and capacitor tank circuit. The LC circuit created by the ground coil and its corresponding capacitor has one degree of freedom and therefore has one resonant frequency. The term resonator most often refers to the use of a homogenous object in which vibrations travel as waves at an approximately constant velocity, bouncing back and forth between the sides of the resonator. To understand further how resonators operate, consider the distance between the sides as being separated by a distance “d”, the length of a round trip is 2d. To cause resonance, the phase of a sinusoidal wave after a round trip must be equal to the initial phase so the waves self-reinforce. These waves take a much longer time to die out and this is why this method of wireless energy transfer has a higher efficiency. See Figure 4.2.1 for the circuit diagram of the oscillator that will be used in this design.

We chose this circuit because of its simple design and its ability to produce the output signal that is needed. The main components of this oscillator circuit are listed below in Table 3.5.15.1 along with the associated costs.

Table 3.5.15.1 – Oscillator Components List

Component	Vendor	Manufacturer	Quantity	Cost per unit
1N4740A	Mouser	Fairchild Semiconductors	2	$0.23 (+S&H)
BYV26E	Mouser	Vishay Semiconductors	2	$0.66 (+S&H)
IRF2807	Mouser	International Rectifier	2	$2.81 (+S&H)
LM7812	Mouser	Fairchild Semiconductors	1	$0.71 (+S&H)

3.5.16 Conduit and Mounting Apparatus

The conduit is used to securely channel the wire from the control panel to the ground coil. There are a number of different types of electric conduit each of which has its advantages and disadvantages. The non-metallic flexible conduit was chosen because it is one of the easiest to use. These conduits are also widely used because there is no need to use specialized tools to bend or form the conduit into the right angles for bends.

Non-Metallic Conduit

Vendor	Home Depot	Features	• Material: Nylon
Manufacturer	AFC Cable Systems		• Size: ½ inch
Quantity	6 ft		• Liquid tight
Price/Unit	$ 9.99		• Rugged
Part Number	88131257		• Color gray
			• UL Listed

Table 3.5.16.1

Figure 3.5.16.1

Figure 3.5.16.1 shows what the flexible conduit looks like. The only problem with flexible non-metallic electric conduit is that it may not be as strong as regular conduit, but for our purposes, it works well. The connector is used to connect one end of the conduit to the control panel and also to connect the other end of the cable to the double gang electrical outlet box attached to the ground coil. Figure 3.5.16.2 shows what the connectors look like. These connectors offer watertight protection which makes it difficult for moisture to enter the conduit and cause corrosion. The connector itself is made with nylon and will not rust or corrode. No disassembly is required when using these types of connectors, just simply insert the conduit and hand tighten the nut.

Halex 1/2 in. Liquid Tight Connector

Vendor	Home Depot	Features	• Material: Nylon
Manufacturer	Carlon		• Size: ½ inch
Quantity	2		• Liquid tight
Price/Unit	$ 1.42		• Rugged
Part Number	76205B		• Color gray
			• UL Listed

Table 3.5.16.2

Figure 3.5.16.2

The clamp is used to strap the conduit to the wall and also to the floor. The simple design makes it easy to install and it keeps the cable in place. Each clamp fits securely over the conduit and takes one screw.

1/2 in. One hole Conduit Clamps

Vendor	Home Depot	Features	• Material: Zinc plated
Manufacturer	Carlon		• Size: ½ inch
Quantity	2		• Rugged
Price/Unit	$ 0.68		• UL Listed
Part Number	E977DC-CTN		

Table 3.5.16.3

2 Gang Weatherproof Electrical Outlet Box

Vendor	Home Depot	Features	• Material: PVC
Manufacturer	Greenfield		• Corrosion resistant
Quantity	1		• Liquid tight
Price/Unit	$ 10.54		• Rugged
Part Number - box	B232PS		• Color white
			• UL Listed

Table 3.5.16.4

The double gang box will house the oscillator circuit board and will also have a small fan attached to it for cooling. The entire assembly will be mounted to the thin board that the ground coil is attached to.

3.5.17 Buck Converter

We initially decided to connect the charge controller directly to our receiving coil but we later realized that we weren't getting enough current to charge the battery to we decided to research into a buck convertor. The buck convertor was used as a power convertor; we needed it to step down the unregulated DC Voltage and increase the current coming from the receiving coil on the car system.

TI LM2596 Simple Power Converter was used to control the power provided by the receiving coil on the car system to the charge controller. The LM2596 Series are monolithic integrated circuit that provides the entire active functions for a step-down (buck) switching regulator; it is also capable of driving a 3A load with excellent line and load regulation. This device was available in 3.3V, 5V, 12V and an adjustable output version; it required minimum number of component which were simple to use and also internal frequency compensation with fixed-frequency oscillator. One of the good this features of this device was that it operated at a switching frequency of 150 KHz which allowed the smaller sized filter components than what would be needed with lower frequency switching regulators. There were standard inductors that were available from several different manufactures optimized for use with LM2596 series; it was also available in standard 5-lead TO-220 package with several different lead bend options, and a 5-lead TO-263 surface mount package. The table below has

Table 3.5.17.1 – Buck Converter Part List

Component	Vendor	Manufacturer	Quantity	Cost per unit
LM2596(ADJ)	Mouser	Fairchild Semicon	2	$3.23 (+S&H)
Zener Diode	Mouser	Vishay Semiconductors	2	$0.66 (+S&H)
Inductor	Mouser	EPCOS	2	$2.81 (+S&H)
IN5825	Mouser	Schottky Rectifier	1	$0.71 (+S&H)

4 Hardware/Software Design Detail

Perhaps the most important section in this report, this section is devoted to the design of our hardware and software components for our prototype. After looking through our research, we've come up with ideas and designs for our subsystems, starting with an Initial Design for the overall system. Then we will look into each subsystem for specifics. The terms GS and CS stand for Ground System and Car System, respectively, and they will be used interchangeably in this section.

4.1 Initial Design Architecture and Related Diagrams

ChargeSpot is designed to be a hands-free, charging system that is intelligent enough to detect and charge an electric vehicle to full capacity. Figure 4.1.1 shows a basic outline of the design. As depicted in the figure, a control panel housing the ground system components is mounted to the wall of the user's garage and two connections are attached to the box. One of the connections carries the AC mains into the unit's power supply while the other connection is used for connecting the ground coil to the oscillator. The control panel and the ground coil is all that the user will see as far as hardware, the rest of the system will be embedded in the car and the control panel.

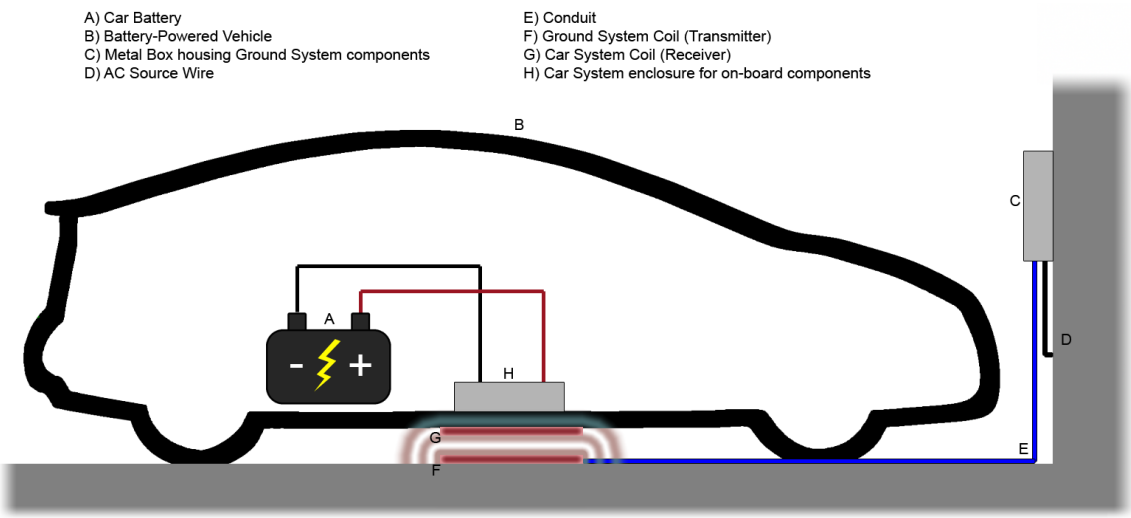

Figure 4.1.1 – Basic outline of Charging System

The cover of the control panel has led displays which indicate the battery percentage of charge as well as the temperature of the battery being charged. The LED display is also used to guide the user into position for proper alignment before charging is initiated.

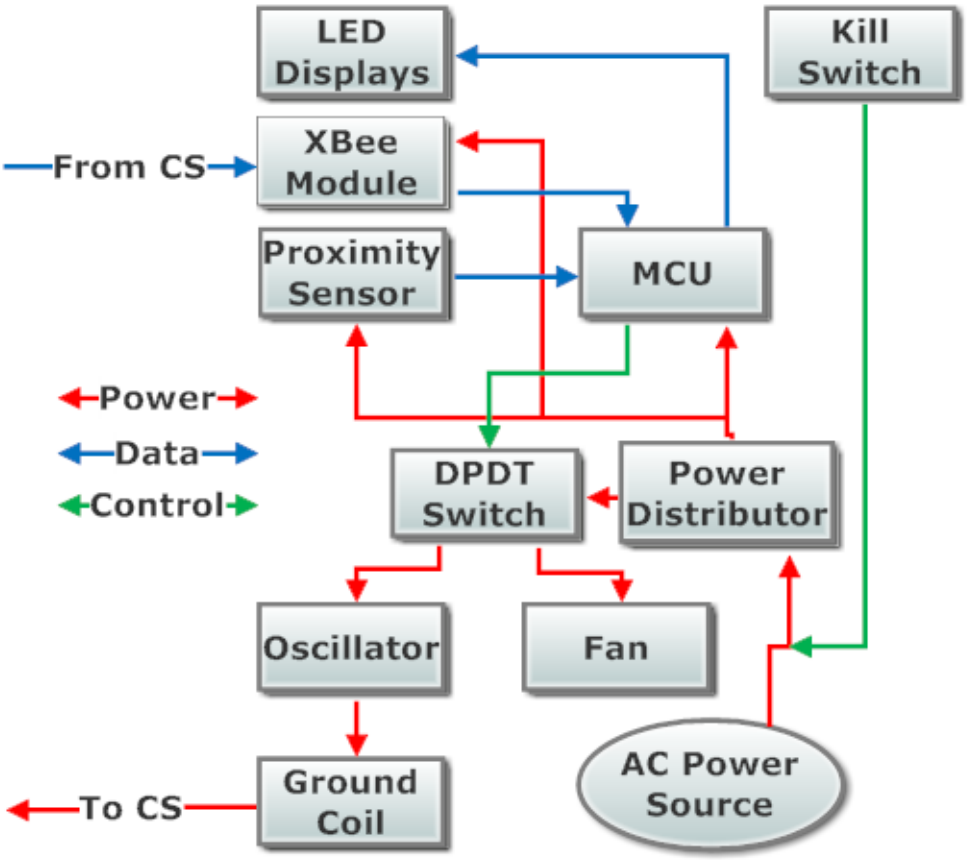

Figure 4.1.2 – Block Diagram for Ground System

Figure 4.1.2 shows the ground system's block diagram, with power, data, and control flows. From the AC power source (120V 60Hz) the power will go into the power distributor which will provide power for both the oscillator (24V), fans (12V), and the ground system components (5V/3.3V). The MCU will collect data from the XBee module (from the car system) and proximity sensor. Certain data is displayed to the LED bar and 7-segment displays. Depending on temperature of battery (from XBee), the MCU will shut down the oscillator via the Switch. A fan will be turned on when the oscillator is turned on (via the Switch). Finally a kill switch, for emergencies, will be able to shut down all power from the source.

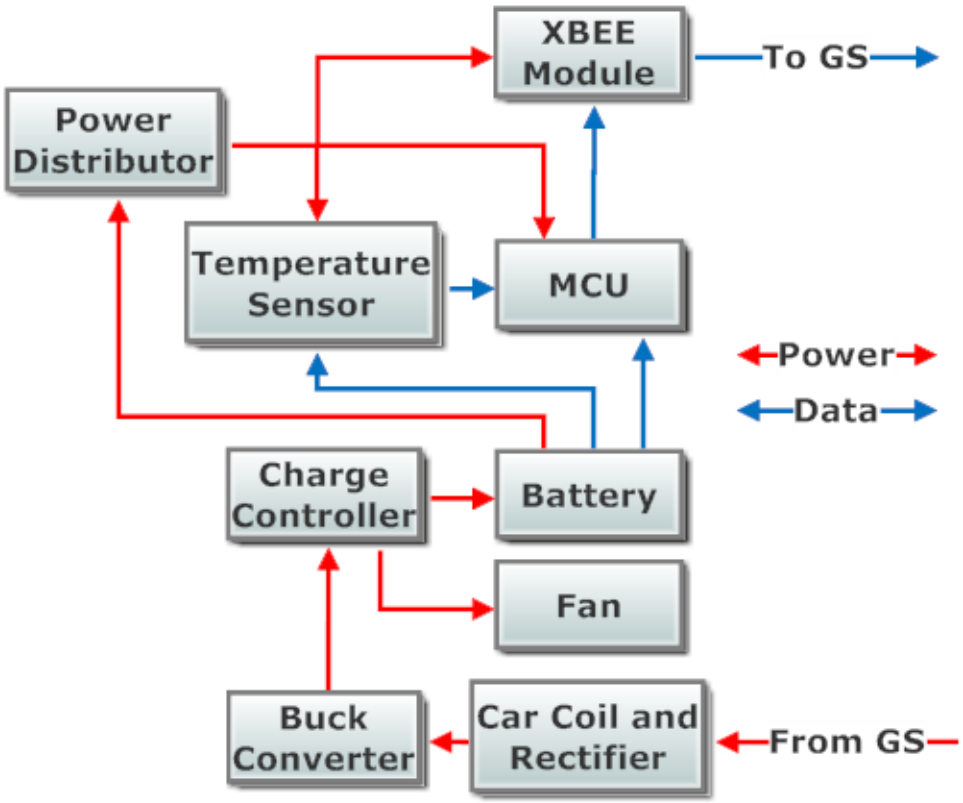

Figure 4.1.3 – Block Diagram for Car System

The car system's block diagram is shown here in Figure 4.1.3. The car system components are powered from the power distributor, which gets its power from the battery itself. To charge, power is taken wirelessly from the ground coil to the car coil and taken into the buck convertor and then to the charge controller. Once the MCU gathers the voltage and temperature data, it sends it to the XBee module to be sent to the ground system.

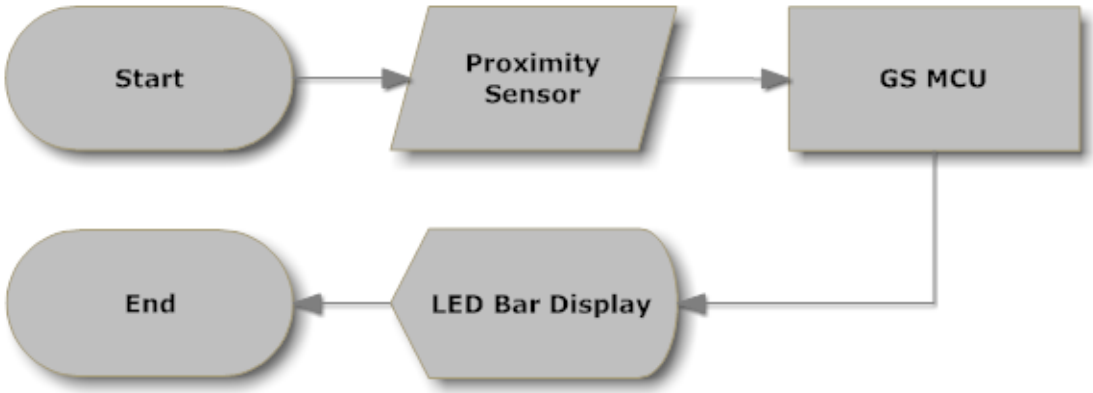

Figure 4.1.4 - GS Data flow

As a vehicle activates the proximity sensor and the XBees are communicating, the GS MCU reads and displays the proximity to the LED bar display and activate certain accessory indicator LEDs. Once certain conditions are met, the MCU will be able to turn on/off the fan and oscillator (which will start the wireless charging through the coils). This is illustrated in Figure 4.1.4 as a simple flow diagram. Upon successful XBee communication and proximity alignment, the battery voltage and temperature are sent from the car to the control panel wirelessly via XBee. Figure 4.1.5 shows how this data is handled until it gets to the control panel's LED display. After preset parameters for battery temperature are met and battery voltage levels are determined to be less than 100%, the charging system is activated and the car battery will be charged with the high resonance frequency charging system. Battery voltage is monitored and continually displayed on the face of the control panel along with battery temperature. When fully charged, the charging system is designed to shut down automatically while keeping the displays active.

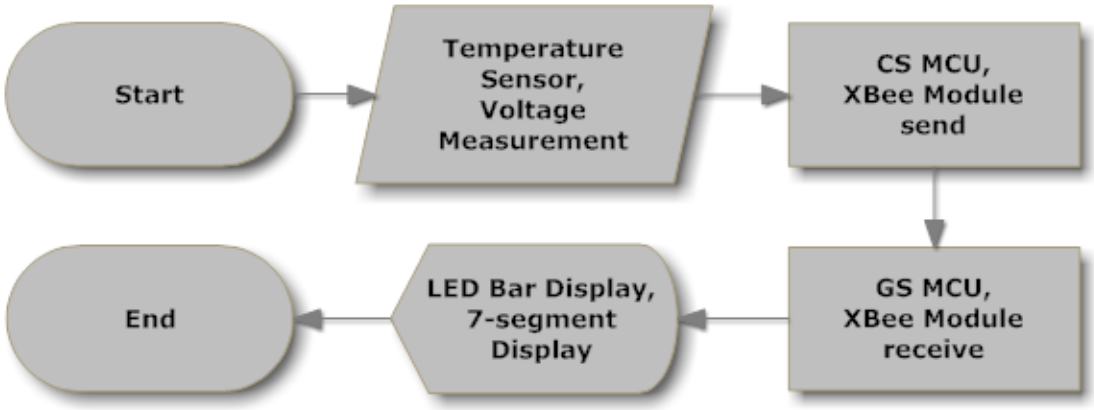

Figure 4.1.5 – CS to GS Data flow

4.2 Power Management

The power supply for the entire charging system will be located inside the control panel of the ground system. After acquiring the transformer of suitable power rating, the power distribution circuit must be designed such that the correct voltage is seen by each device requiring power. The transformer step down the AC voltage to 24VRMS and the bridge rectifier chip (PMR27K100) rectifies the signal to produce a 24V DC output voltage. A 200 mF Capacitor is also incorporated and is used to filter the output signal of the rectifier producing a DC level free of ripples. A 5 Amp fuse is placed in series with the output of the rectifier for overcurrent protection. The remainder of the power distribution circuit is simply a series of voltage regulator circuits beginning with a 12 V regulated output voltage which is

used to power the cooling fans. The 12V output from this stage is further regulated to 5V, and this is used to power the microcontroller and other onboard IC's. The final stage is the 3.3V stage which powers the XBee wireless communication device. The various stages are shown in Figure 4.2.1 with the accompanying capacitors for additional filtering of the output voltages.

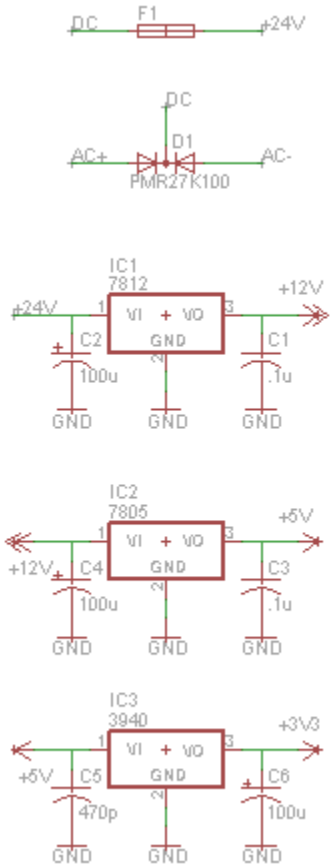

Figure 4.2.1 - 24V/5A Power Supply and subsequent voltage regulation stages

We expected the IC to become hot during operation and will be using a suitable heat sink to help in dissipating the heat. The temperature inside the control panel will also be maintained by a fan which operates only when the oscillator is operating. The LM3940 IC used is a 1A low dropout regulator suited for systems which contain both 5V and 3.3V logic devices. The LM3940 also has the ability to maintain a constant 3.3V output in regulation with input voltages as low as 4.5V. Additionally, in most applications the full 1A of load current can be delivered without using an additional heat sink.

4.3 MCU Display

All relevant information is viewable through the ground system MCU display on the control panel. The data collected from the car system MCU--temperature and battery voltage level--is sent to the ground system MCU via XBee and processed to be displayed. The display is mounted in the control panel that will house all the electronics for the ground system. The display will consist of three 7-segment LEDs to display the temperature, eight LED bars to display the proximity status and the charging status, and finally some accessory LEDs that provide further user interfacing and informative data.

The 7-segment displays and the LED bars will not be on the same printed circuit board as the MCU, nor each other; there are each on their own perforated board. Temperature can be read from the 7-segment displays only, with total possible temperature readings ranging from 0°F to 99°F and 0°C to 99°C. To the average user, knowing the battery temperature means nothing, because an average user might not know what a good temperature for a battery is. According to Fischer-Price, the optimal operating temperature and charging temperature for their 6V or 12V batteries for their PowerWheels line of toys are the same, ranging between [negative] -25°C and 30°C. Since we are performing tests in Florida, we don't have to worry about any temperatures less than 0°C. This could be accommodated by having a fourth 7-segment display to display the negative sign. The LED bar display will be mounted above the 7-segment displays. The data that will be fed through the display will involve two sets of information: [Mode 0] the range of the vehicle given the proximity sensor and [Mode 1] the charge level of the batter and status. We can call them Proximity Mode and Charging Mode, respectively.

In Proximity Mode, which can also be considered the idle mode, consider a vehicle pulling into a driveway, passively connecting the XBee modules and thus activating the proximity sensor. The proximity sensor feeds the ground system MCU data and is processed to the LED bar display as a viewable way to ascertain your distance from the garage wall for the systems to work most efficiently. You can see the LED bar displays and know when exactly you should stop; the displays will act as a distance meter using green as good/go and red as bad/stop (blinking red will indicate that you need to reverse). An example of what we're trying to create can be seen in Figure 4.3.1. The LED bar will fill with green as you approach (4.3.1a), and once you're in the correct position, the last LED bar will fill red (4.3.1b), indicating to stop. If you go over, the LED bars will all fill red and blink (4.3.1c), indicating to back up.

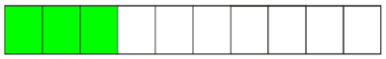

Figure 4.3.1a

Figure 4.3.1b

Figure 4.3.1c
This figure shows 10 bars, but the actual amount is 8 bars.

The modes transition once the vehicle is in place (satisfying the proximity condition), and upon entering Charging Mode, the LED bar displays will turn off. While the modes are transitioning, the car system MCU and ground system MCU are communicating vital information regarding whether or not to charge the battery. Once charging is determined, the LED bar display will light up with information relevant to both the level of voltage of the battery. Similar to Figure 4.3.1a, the green will fill up to the nearest 12.5 percent of charge (12.5%, 25%, 37.5%, etc.) and blink while charging. Between 87.5% and 100% charge, all bars will be filled green and will blink. Once 100% charge is achieved, all the bars will be a solid green. If the battery is not charging, due to temperature, the LED bars will fill with red and blink. However, if the reason it's not charging isn't due to the battery being out-of-range temperature-wise, the bars will be solid red, indicating there is something wrong with the battery or the systems.

Additional LEDs are used for further information acquisition by the user. As previously stated, the average user might not know what the optimal temperature for their battery is. The Temp Error LED help the consumer understand the temperature display by indicating if the battery temperature is out-of-range. If this LED is on, the system will wait for the battery to cool down until resuming charging. Another LED indicates Charging Mode (it being off will mean it’s in Proximity Mode), and another LED actually indicates if the oscillator is on, thus charging the battery, called Battery Charging. Another LED indicates XBee Connectivity, and nothing will work unless that LED is on. Finally, the last indicator LED is the Proximity Condition LED, which turns on as long as the vehicle is parked in the most efficient spot for charging (as causes the modes to transition).

Figure 4.3.2 is an example of what the final control panel will look like. In actuality, the LED bar display lies at the top of the control panel. Below it lies the 7-segment display, arranged upside-down so that the decimal point can be used as a degree symbol (°). The third (farthest right) display will always be F or C. Below that, slightly to the right, lies the 5 accessory indicator LEDs, starting with Battery Charging, Proximity Condition, XBee Connectivity, Temp Error, and Charging Mode. At the bottom of the control panel lies the proximity sensor. System power is indicated by a blinking decimal point in the left-most 7-segment display. We came up with two designs for the LED bar display, one utilizing decoders that

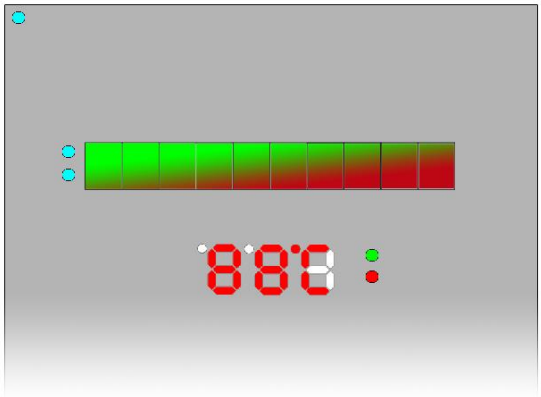

Figure 4.3.2 – Visual example of display setup.
Figure shows 10 bars, but there will actually be 8 bars.

reduce pin use from 16 to 5. The first design, seen in Figure 4.3.4, has 4 pins connected to the inputs of the decoder, and 1 pin connected to the control line of the decoder. The purpose of the inverters before the LEDs is to keep only one LED on at a time, stead of all on and only one off at a time. This is because the output of the decoder is inverted, so essentially we are "un-inverting" the signal. The design we actually implemented, the second design, is the one utilizing shift registers, and only requires 3 pins (data, clock, and latch). Figure 4.3.3 shows the design's schematic created in EAGLE.

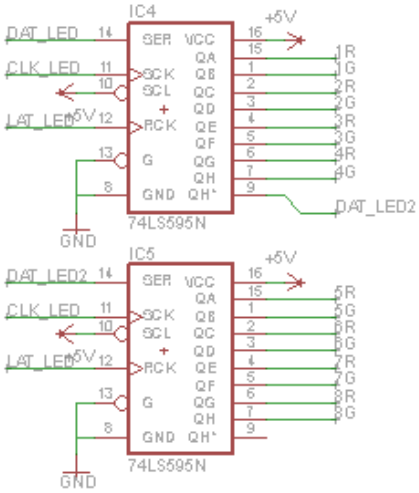

Figure 4.3.3 - LED Bar Display Design 2

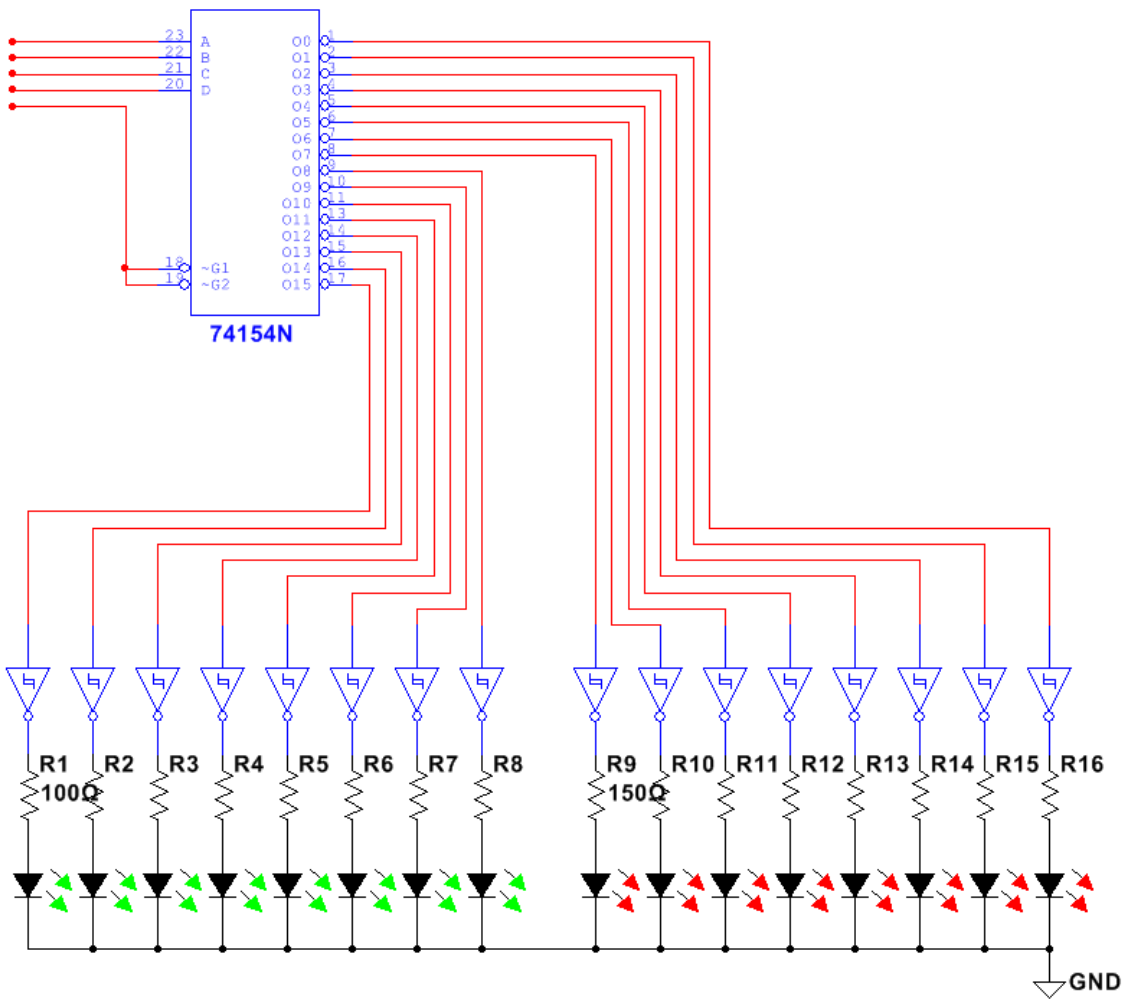

Figure 4.3.4 - LED Bar Display Design 1

Each set of LEDs (green/red) will be in each bar, so there will be 8 bars total. The resistances 160Ω and 150Ω allow for ~19.8mA of current flow to each LED for brightest and most efficient lighting (for simulated LEDs). According to Mouser, the green LED we will be using has a turn on voltage of 2.2V and the red LED has a turn on voltage of 2.5V. To get the actual resistance values you need to apply the following equation to each LED:

$$R = \frac{V_{CC} - V_{\gamma}}{I_S}$$

where V_{CC} is the power supply (5V), V_{γ} is the turn on voltage of the LED (2.2V or 2.5V), and I_S is the steady current for ideal lighting (25mA for these specific LEDs). So ideal resistance values are 112Ω for green and 100Ω for red. The same method can be similarly used for finding the resistance values (if not built-in) for the following design for the 7-segment display.

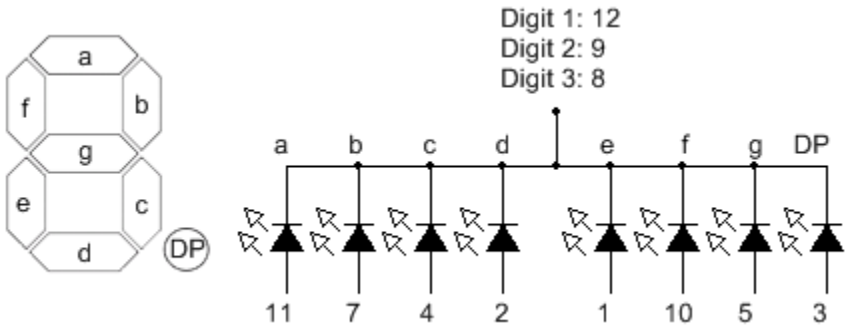

Figure 4.3.5 - Pin layout for 7-segment display (common anode). Pin 6 is not connected.

The 7-segment display had a similar problem as the LED bar display--too many pin inputs. Our chosen component has 12 input pins, detailed in Figure 4.3.5. This is an unnecessarily large amount and we can definitely reduce that. We designed two ways to connect the display using only 6 pins. Figure 4.3.7 shows the first design, and is similar to the first design of the LED bar display. The first 7-segment display design uses the same 74154N 4:16 decoder, except only 3 pins are needed, since we're only able to control 8 LEDs on each display (the 7 segments plus the decimal point). The 3 other microcontroller pins attach to the display pins that control which digit of the display is turned on. Pin G isn't considered to be a counted pin (thus making 7) since it can be connected to the previously used Pin G on the other 74154N for the LED bar display as it is a control to essentially turn on or off the decoder, so this 7-segment display only uses 6 microcontroller pins. If you want to be able to turn off the displays separately then you would need that extra Pin G. The second design is the one we implemented, and just like the second design for the LED bar displays, it involves a shift register, shown in Figure 4.3.6. As with the first design, 3 pins come from the microcontroller to control with digit to display. The other 3 pins go to the data, clock, and latch pins of the shift register.

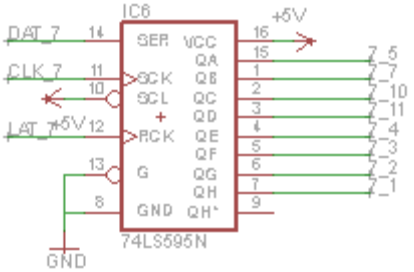

Figure 4.3.6 - 7-segment Display Design 2

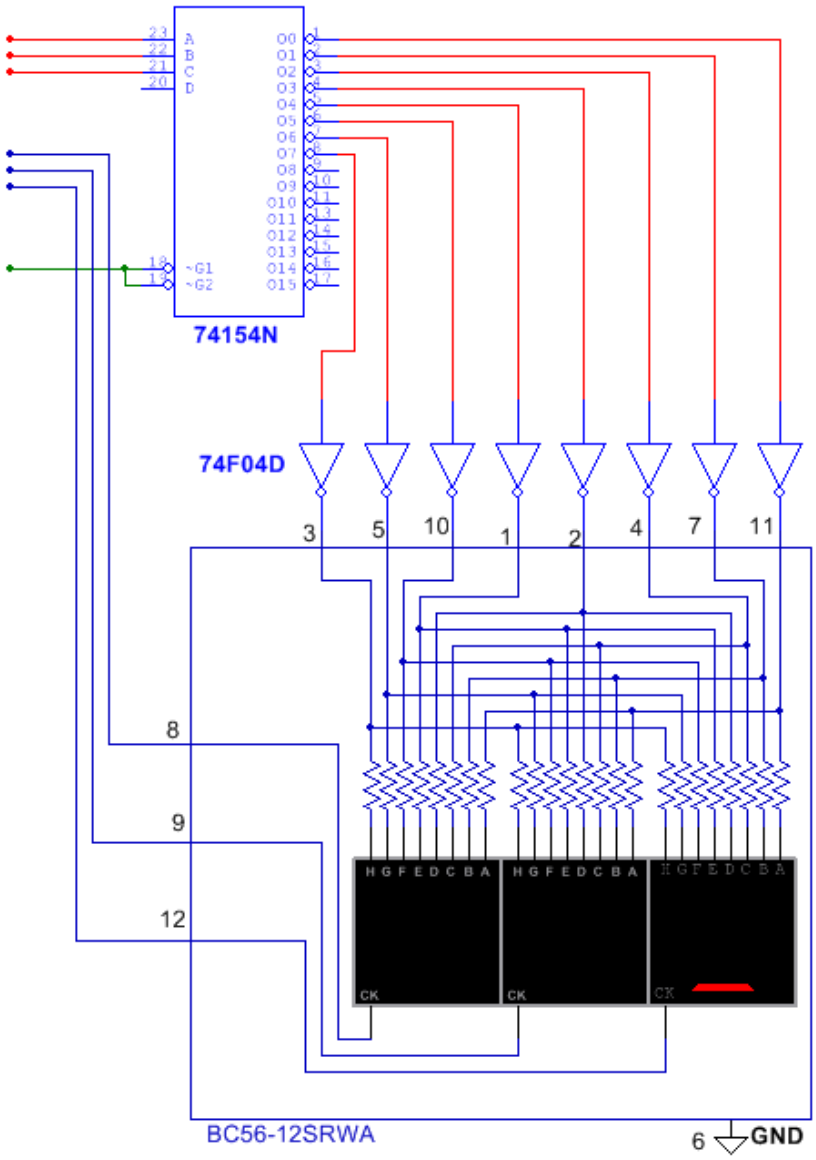

Figure 4.3.7 - 7-segment Display Design 1

Our simulation software did not have a footprint for our 7-segment display, so we combined 3 displays and made the internal circuitry so that it mimics the actual device. Pin 6 is a hidden pin on the displays since it's not connected. Also, each 74F04D chip contains 6 gates, so we'll need at least 2 chips. However, from the LED bar display, 2 gates are unused on its third chip, so we can have an even 4 chips with all 24 gates being used (16 for LED bar and 8 for 7-segment). Also, in regards to the 7-segment in Figure 4.3.5, they will be upside-down (turned 180 degrees), so that must be taken into consideration when coding the displays. On the next page, Figure 4.3.8 shows how both displays will be put together in regards to pin connections to the microcontroller as per their first designs. The combination of the second designs, the ones implemented in our prototype, will be seen later.

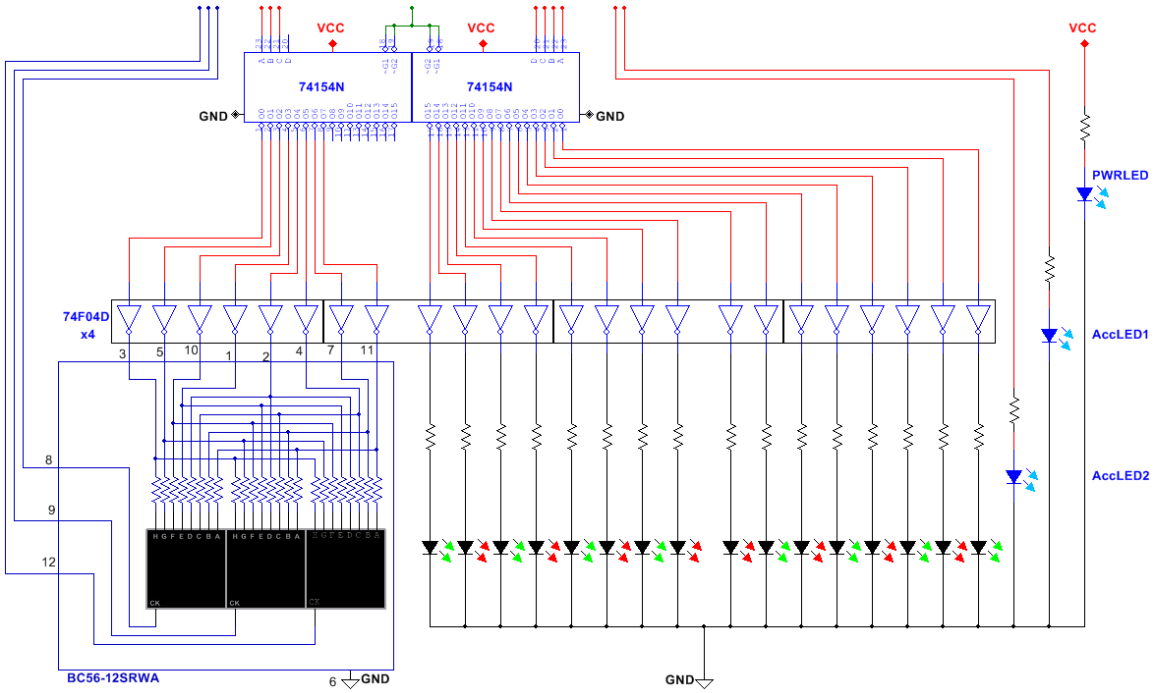

Figure 4.3.8 - Ground system LED setup as per Design 1

4.4 Proximity and Motion Sensor

The design for the proximity and motion sensors was really simple. We use a motion sensor to activate the proximity sensor, as a power-saving benefit as well as to make up for possible shortcomings of the range of the proximity sensor. The motion sensor (RK115FCUL00A) takes in a 12V supply. If motion is sensed through its passive infrared detection, the switch connecting the In and Out pins on the sensor closes, allowing the 5V input to enter the proximity sensor (GP2Y0A02YK) and power it. On paper, this is excellent, but in practice not so much. We decided to scrap the motion sensor because it seemed redundant to implement and we had issues mounting it to the panel. So even though we have this free $50 motion sensor, we're just going to bypass it and focus on the HC-SR04 proximity sensor. Figure 4.4.1 shows the orignal setup of the sensors.

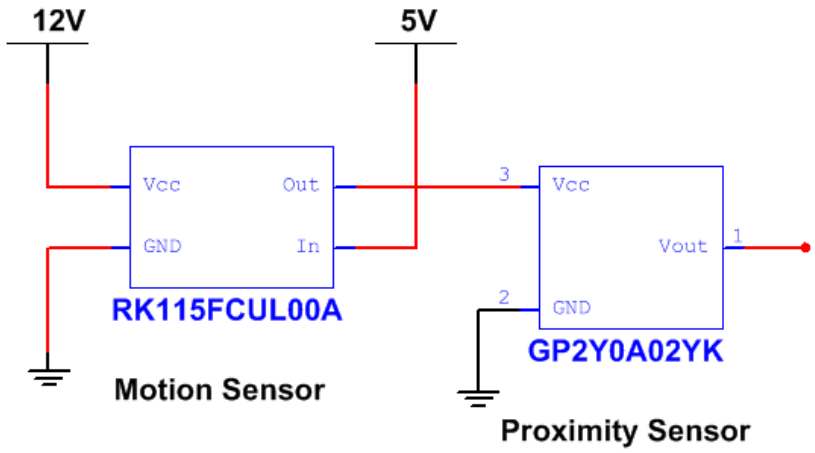

Figure 4.4.1 – Original Design of Proximity and Motion Sensors

4.5 Ground System - Device Enclosure

As shown before in Figure 4.3.2, most of the ground system is enclosed or mounted in the control panel. The only subsystems that are not placed in or around the control panel will be the oscillator and ground system coil. Figure 4.5.1 shows exactly what's inside the control panel and the input and output wires (looking through the metal faceplate of the box). The red wire, representing AC input, goes straight to the Power Distributor--the blue wire, representing DC output, goes straight to the oscillator and its fan. The displays take up a majority of the control panel. The proximity sensor is placed at the bottom of the control panel because they need to be as close as possible to the car or car bumper for accurate proximity results. The fan is placed close to the power distributor components because that is where a lot of heat will be generated. For detailed connections within the subsystems, see Section 4.1 for block diagrams or Section 5.1 for full schematics.

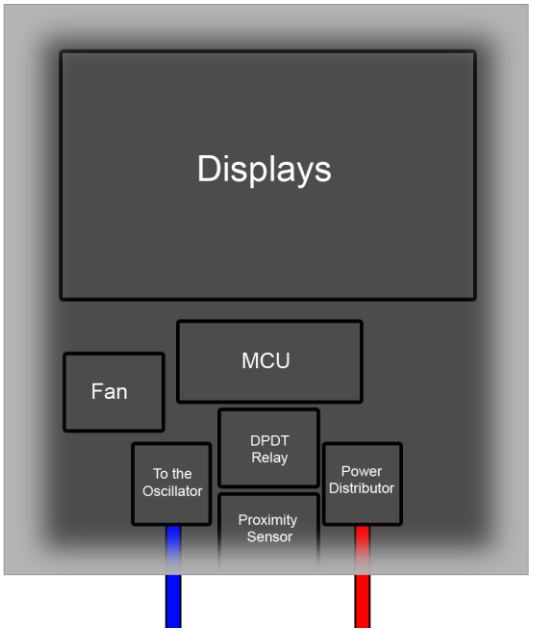

Figure 4.5.1 - Ground System Components

Physically, you can imagine a first aid box, perhaps larger, and a solid generic color, ideally unpainted, mounted onto the back of a garage wall. Something that you may already have installed could be a key box, or a thin mailbox, or even a circuit breaker panel that's extruded from the wall a bit. For this project and testing purposes, the control panel is like that key box, and if put into production, could be installed into the wall like a circuit breaker panel and everything would look seamless and integrated. Our testing version will have two wires going in and out of the box. The input wire being power from the AC home outlet; usually a few are in the garage. The output wire to the oscillator and its fan. In the consumer world, the control panel will be getting power straight from the house's grid, instead of from an outlet, so this rids of the input wire. The output wire can either come out of the control panel to the coil or be integrated into the wall and/or garage floor. In the consumer world, the ground coil can be integrated into the garage floor. This is explained more in Section 4.10 Coil Enclosures.

4.6 Charge Controllers

From our research, the charge controller in Figure 4.6.1 was the first one we picked for our project, because it was designed purposely to produce or provide the exact voltage or current for an automobile with 12V batteries only. It is easy for a car battery to overcharge when in use while charging because the battery has a design that produces a few amperes when it is continuously charging while in use. This overcharging can be prevented by this charge controller; it provides a retroactive control circuit that monitors the charging conditions of the battery. The retroactive circuit as an LED that indicates when charging is full and deactivates the charge

circuit. One thing we noticed about this circuit was that there can be voltage drop when the current is flowing through the cable connected to the transformer because of the heat the current produces. This voltage drop can be decreased by increasing the cross-sectional area of the cable being used.

We could have adjusted the element in this circuit if we had used this design (shown in Table 4.6.1) to make sure we were getting the right current or voltage going through the circuit to the battery. We could have set TR1 to null in other to check the LEDs and make sure they're on before connecting the battery. After battery had been connected, this circuit would allow us to send about 2A to 4A of current through while we make sure that LED2 was turned off. We could have used the hydrometer technique to adjust TR1 very carefully by 100mA until LED2 was turn on; by carefully adjusting TR1, LED2 could start flicking which indicates that the battery was charging. Q1 can be biased by R3-R4 and LED2 in each half circle to act like a rectifier that charges the battery. C1, TR1, R2, and D2 could combine together to activate Q2 when the voltage of the battery goes beyond the predetermined value. After Q2 has been activated, Q1 gets deactivated by the current supply cut off as the battery terminal voltage is increased. This increased terminal voltage is fixed by TR1 to stay above the lowest voltage of the battery; after this happens Q2 shifts the control of Q1 gate.

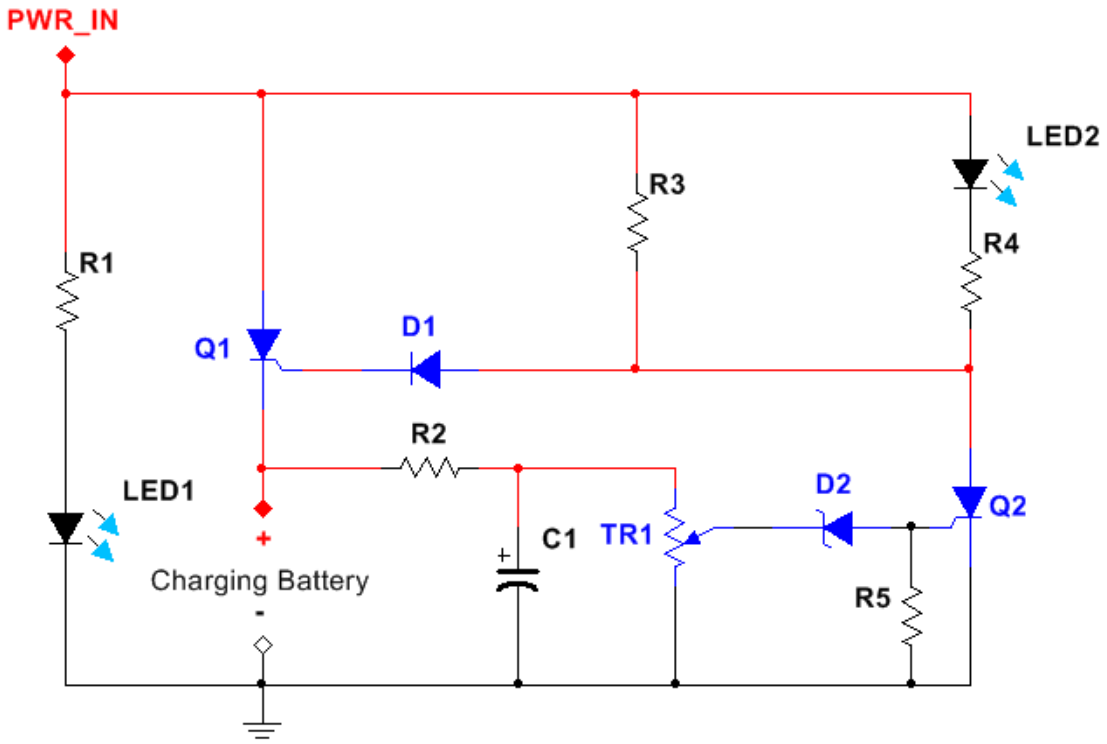

Figure 4.6.1 – Design 1 for Car Batteries

Table 4.6.1 – Design 1 Parts Reference

COMPONENT	SPEC	COMPONENT	SPEC
R1	1K Ω	R2	1.5 K Ω
R3,R4	470 Ω	R5	10 K Ω
D1	1N4001	D2	6.8V .5W Zener
TR1	4.7K Ω trimmer	Q1	BTY79 / 6A SCR
Q2	C106D SCR	C1	10µF
LED1	Green LED	LED2	Red LED

The charge controller in Figure 4.6.2 could make a great choice for this project because its features are easy to setup with one potentiometer for adjusting the float voltage. The most important fact about this design is that it has been designed purposely to make a charge controller with analog simplicity, high efficiency, and reliability. We could have use this charge controller as a medium for power between the terminals of our receiving coil and a 12V battery. Table 4.6.2 gives the references to the parts used in this design.

The reverse current flow from the battery to our resonance terminal will be prevented by D1. Q2 turns on the power for the rest of the circuit when there is power input. The reference voltage for the comparator IC1a is provided by IC2; this same IC2 provides a 5V regulated voltage to power up the comparator circuit. Q1 and Q3 activated and turned on by the comparator IC1a when the battery voltage is below the desired full voltage and charging is required. Because Q3 is a P-channel MOSFET we will be able to allow the circuit to be wired with a common ground. IC1a functions as a biased Schmidt trigger oscillator to switch the charging current off and on when the battery reaches its set charge current or voltage point. This switching causes the battery voltage to oscillate a few millivolts above and below the desired voltage set point. In order to get a better operation will be using a rail-to-rail op-amp. Between the output of IC1a and IC1b there will be a red/green LED; the signal from IC1b will be an inverted version of the IC1a. Since we don't want another reference divider circuit, pin 5 of IC1b which needs only an approximate center point to work as an on-off comparator, will be connected to the varying IC1a pin 2. The comparison between the battery voltage and the reference voltage coming from IC2/R8/R9 is done by a resistive bridge circuit formed from the resistors and thermistor on the input side of IC1a. The voltage point at which the circuit will oscillate on full load is adjusted by the potentiometer. The maximum frequency for oscillation is set by C6 and the positive feedback is added by R7 to the IC1a for Schmidt trigger characteristics.

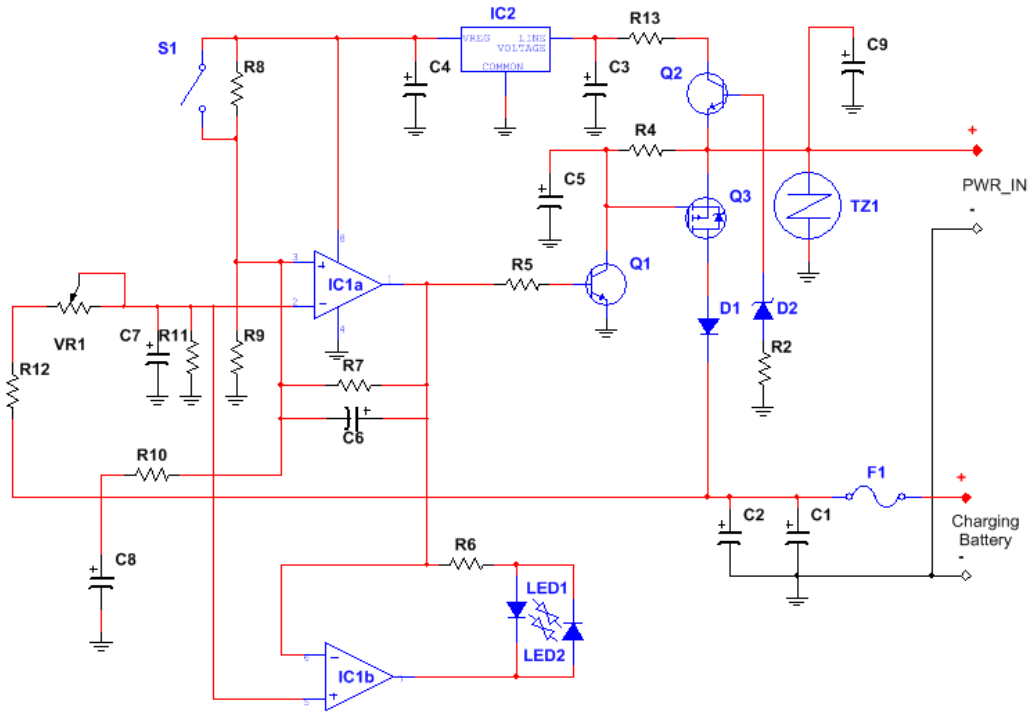

Figure 4.6.2 – Design 2 for 6V/12V/24V Batteries

Table 4.6.2 – Design 2 Parts Reference

COMPONENT	SPEC	COMPONENT	SPEC
IC2	TLC2272CP	IC2	78L05
D1(6V,12V)	19TQ015	D1(24V)	18TQ045
D2(6V)	1N5231 zener	D2(12V)	1N5242 zener
D2(24V)	1N5252 zener	Q1	2N3904
Q2	2N3906	Q3	IRF9Z34N
LED1,LED2	Red/Green LED	C1	47µF
C2-C4,C7-C9	0.1µF	C5,C6	0.001µF
TZ1(6V,12V)	27V Transzorb	TZ1(24V)	47V Transzorb
TM1(12 V)	2.2K Ω@25C Therm	TM1(12V)	3.3K Ω@25C Therm
TM1(24V)	4.3K Ω@25C Therm	R1	~
R2(6V)	1K Ω	R2(12V)	2.2K Ω
R2(24V)	3.9K Ω	R4	10K Ω
R3	~	R5,R8	100K Ω
R6	750 Ω	R11	75K Ω
R10	180K Ω	R9	200K Ω
R12(6V)	100K Ω	R12(12V)	300K Ω
R12(24V)	470K Ω	R7	100 Ω
VR1(6V,12V)	100K Ω	VR1(24V)	500 Ω
F1	10Amp Fuse	S1	2 pos DIP switch

We finally decided to use a 12V Low Dropout Voltage (LDV) charge controller to charge the vehicle's battery. We chose to use this charge controller because it was the easiest to implement among the entire charge controllers that we reached on. It has an output voltage that exceeds the input by 1.24V when charging at a maximum rate and does not require current limiting. This circuit maintains a charged battery and also charges the battery at a constant voltage. To obtain a maximum voltage at 12V we set the control to 14V to 14.6V; the automotive systems further reduce voltage to 13V to 13.5V. In order for us to know if the battery was full, we used a 1K dummy resistor load to set the output voltage. This resistor is necessary to shunt the MOSFET leakage current as we as to green LED current.

The difference between the feedback voltage from the arms of the potentiometer (R6) and the reference voltage is amplified by a classic differential amplifier (Q1 & Q2); R4 and D1 form a 6V shunt zener voltage reference. The gate of the P Channel MOSFET is driven by the collector of Q1 and the differential voltage gain was probably in the order of 100 to 200. As the feedback voltage increases at the arm of R6, Q2 turns on harder and steals some of the emitter current away from Q1. The collector current of Q1 follows the emitter current and drops less voltage across R1 thus reducing Vgs of Q3 and turning it off. It order to prevent the amplifier from oscillating C2 was used to provide frequency compensation. Q3 is dormant unless the battery is connected reverse –should this happen, Q3 turns on and reduces the reference voltage input to zero thus turning Q1 & Q3 and preventing damaging battery current. D3 was used to prevent the battery voltage from appearing across an inactive power source, which in this project was our receiving coil from the car system. Figure 4.6.3 below show the schematics of this charge controller, specific parts listed within.

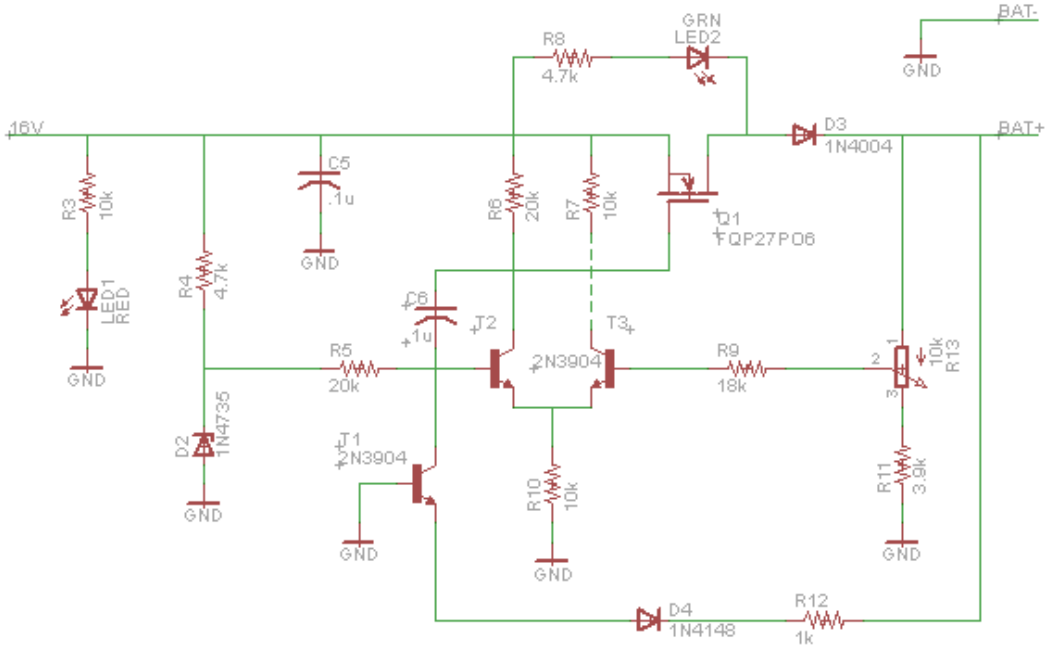

Figure 4.6.3 – Design 3 used for Prototype

4.7 MCU Sensors

In order to have some control over the charging of the battery, and not having it continuously charge, thus possibly destroying your battery, vehicle, and home, we had to add sensors to the battery. These sensors provide data about the status of the battery, whether it's at a safe temperature to charge, and whether it needs to be charged so as to not overcharge. For this to be possible we needed two sensors: a temperature sensor and a charge sensor.

The temperature sensor is needed to make sure the battery is within a safe temperature to charge. If the battery is too hot, charging it will not only be very inefficient, but it can also cause a battery fire. If the battery is too cold, charging will also not be very efficient. The infrared sensor looks directly at the battery. Safe temperatures for charging are determined by the battery and its manufacturer.

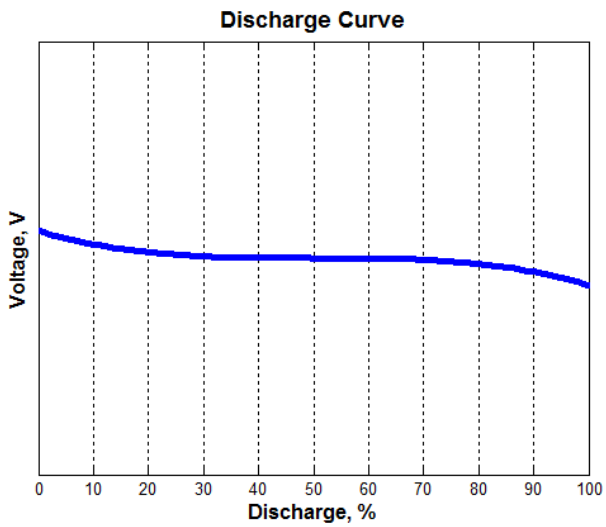

Figure 4.7.1 - Example of Discharge Curve

The charge sensor is needed to make sure the battery is not overcharged by measuring its state of charge (SOC). There were different ways to approach this problem. The easiest way was to measure the voltage of the battery terminals compare it to its discharge curve (see Figure 4.7.1), which is usually supplied by manufacturer, but can be created by us if needed. This gives us a very rough idea of the battery's SOC. For greater accuracy, we could find the current proportional to the voltage at each stage and use that (Current versus State of Charge) in conjunction with the discharge curve. Our final implementation was reading the voltage level of the battery through a voltage divider circuit, as shown in Figure 4.7.2. BAT+ represents the battery's positive terminal and VOLT represents the analog input to the microcontroller.

Figure 4.7.2 - Voltage Divider Circuit (R14=10k, R15=4.7k)

As far as the importance of sensors goes within the MCU, the temperature sensor takes priority, with the battery having to "pass" the temperature test in order to be charged. Upon passing the temperature test, the battery is tested again in regards to voltage through its terminals, and its SOC will be assessed. If its present values allow it, the charge controller charges the battery. The temperature sensor is pretty straightforward--read analog values and send to MCU for data processing. The temperature sensor we chose (ZTP-115M) has three pins, labeled in Figure 4.7.4. One pin for power, one pin for ground, and one pin for analog V_{out} which goes to the microcontroller--easy setup.

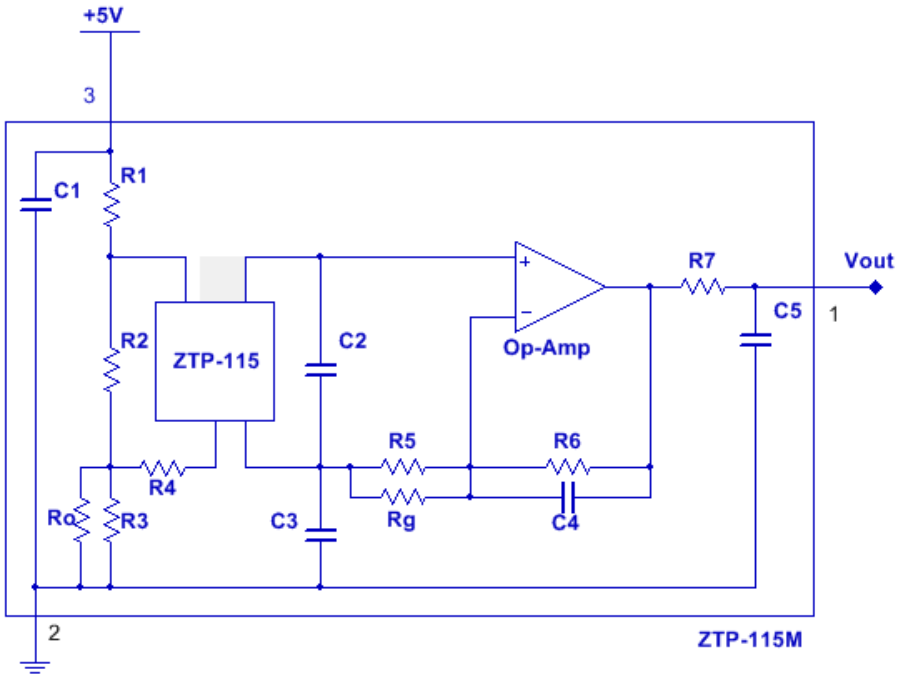

Figure 4.7.3 - ZTP-115M details

4.8 Car System - Device Enclosure

Similar to the ground system device enclosure, the car system version is almost the same except instead of a control panel the subsystems are mounted near the battery, hidden from everyday view under the vehicle's seat. All the systems are on one perforated board, and the temperature sensor has wires that come of the board and go directly to where it's fixed near the battery. Figure 4.8.1 shows a green PowerWheels, and you're looking through the hood at the car system's components. The coil, shown through the floor of the "engine compartment", will be fixed under the vehicle. Power is transferred from the coil through the rectifier, and goes through the buck converter to the charge controller. The charge controller is directly connected to the battery, with a reverse current protection diode. The battery gives power to the power distributor for the car system. The temperature sensor sends data to the MCU concerning the battery, and the MCU is either connected through the voltage divider circuit to measure the battery's terminals. Section 4.1 explains in further detail through block diagrams and Section 5.1 has more detailed schematics.

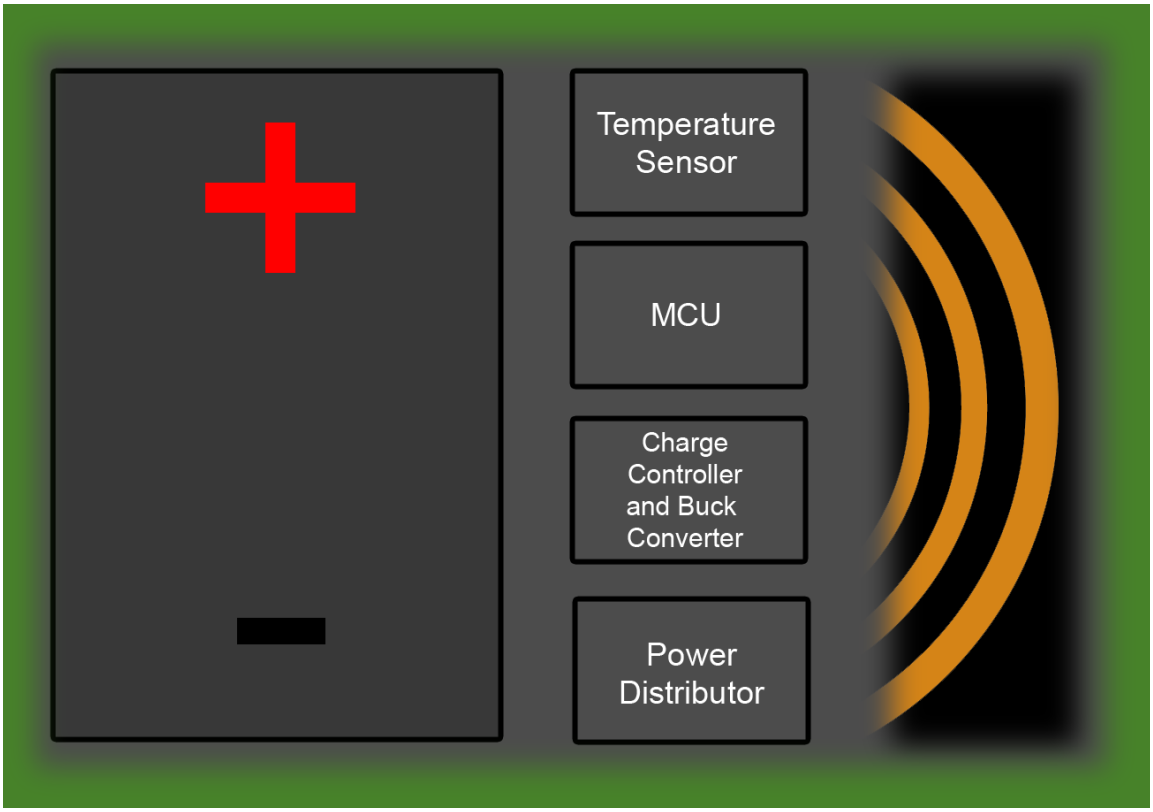

Figure 4.8.1 - Car System Components

4.9 Transmitting and Receiving Coils

The two main coils used for this design are both air core inductors. We chose this type of inductor because we do not want to depend on a ferromagnetic material to obtain a specific inductance. Also, air core coils are relatively free of iron losses which pose a problem for coils with ferromagnetic cores. Other advantages of air core coils include the fact that its inductance is unaffected by the current it carries and this helps a great deal in our application since charging current can vary depending on battery charging needs. In addition, since we have to maintain magnetic resonance in both coils, fluctuations in inductance due to current capacity would greatly affect the efficiency of our system. The production of harmonics can also affect the sensitive electronics in our design and cause unwanted behavior. Using an air core coil prevents the production of harmonics and also produces a better Q-factor, greater efficiency, greater power handling, and less distortion. These coils can be designed to perform at frequencies as high as 1GHz, although most ferromagnetic cores typically tend to be rather lossy above 100MHz.

There are definitely some disadvantages in using the air core coil, however, they are overshadowed by the benefits and most of them can be tolerated without greatly affecting performance. Without a high permeability core, more turns and/or a larger coil is needed to achieve a given inductance value. In designing our coils we have to be mindful of the fact that more turns means larger coils, lower self-resonance due to higher inter-winding capacitance and higher copper loss. Since our application utilizes a high frequency voltage signal which generally doesn't need high inductance, this would not be a problem.

The air core coil also provides the benefit of providing an external radiated field at our resonance frequency which we want to be strong enough to be picked up by the receiver coil. Figure 4.9.1 shows a cross section of what the coils will typically look like once wound. We plan on using around 9 turns per coil which we believe will provide a strong enough magnetic field for our purposes. These coils will be carefully hand-wound to our precise specifications.

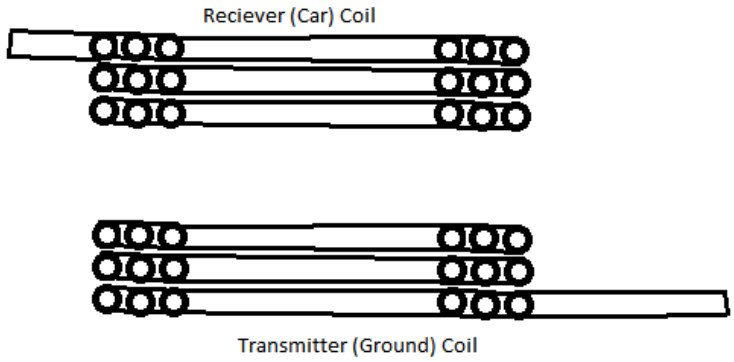

Figure 4.9.1 – Cross section of transmitter and receiver coils

Another design that is being considered is the flat spiral arrangement as shown in Figure 4.9.2. This is a space saving design and works out well if the car does not have much ground clearance. For this design, the receiver coil can be made smaller than the transmitter coil to compensate for misalignment. The transmitter coil was the center tap design made with 3+3 turns while the receiver coil was made with 5 turns.

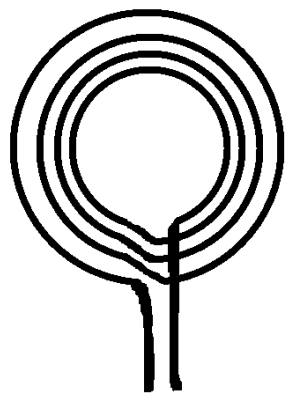

Figure 4.9.2 – Basic formation of transmitter coil (receiver coil is identical)

The condition of resonance is experienced in a tank circuit design when the capacitive reactance is equal to the inductive reactance. Because the reactance of an inductor increases with frequency and the reactance of a capacitor decreases with increasing frequency, when placed in parallel, there will be only one frequency where these two reactances are equal. This frequency is the resonant frequency of the tank circuit. We cannot obtain the resonant frequency of our circuit until the coil is wound. After the coil is wound and the inductance is determined using a method described in Section 7.2. The capacitance value will be chosen based on the output frequency of the oscillator circuit. The relationship is given by the formula:

$$f_{resonant} = \frac{1}{2\pi\sqrt{\mathrm{LC}}}$$

We may not be able to acquire the exact value of the capacitance needed for the resonant condition. In this case we will have to tweak our oscillator frequency or adjust the number of turns of the coil. The same condition for resonance must be adhered to in the tank circuit on the receiver side. The coil inductance and capacitor values must be such that it matches the resonant frequency of the transmitter coil.

4.10 Coil Mounting and Enclosures

Upon successful testing of the final coil designs, they will have to be permanently mounted. One will be mounted to the car and the other fixed to the ground. We cannot simply place a few screws through the coils and mount them as that would be impractical. The coils will be mounted to Medium Density Fiberboard (MDF) and will be held in place with heavy duty staples as seen in Figure 4.10.1. This offers the rigidity that we need for secure mounting of the coils, and it is also very light weight.

Figure 4.10.1 – Coil secured to fiberboard with staples

The MDF for the ground coil is made large enough to accommodate the double gang PVC box containing the oscillator circuitry. The MDF for the car coil just has to be large enough to be bolted securely to the underside of the vehicle.

4.11 Microcontroller and XBee

Amongst our researched parts for microcontrollers and XBee modules, we finalized our decision; ATMEGAG32P microcontroller and XBee module were the best–in terms of cost, availability, programming, and reliability– components for our project. The details of why we choose these components for our project are further explained in Section 3.5.12 and 3.5.13. Both components are mounted on the same PCB/perforated board along with other miscellaneous components if necessary and other systems. The following are footprints of both components and the function of their pins.

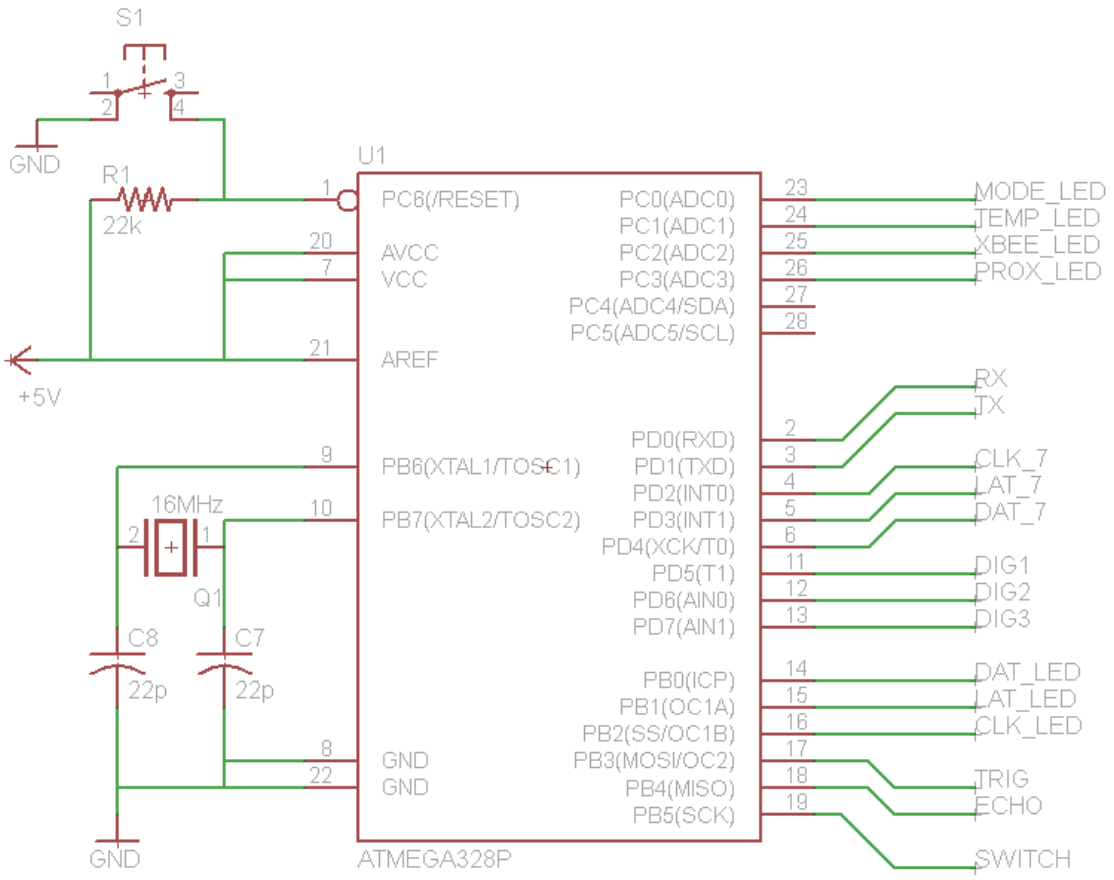

Figure 4.11.1 – ATMEGA32P Ground Microcontroller

Figure 4.11.1 shows the ground microcontroller's footprint, created in EAGLE. Starting at the top left, pin 1 is the reset pin. Pins 7, 20, and 21 are connected to 5VDC for power. Pin 9 and 10 are the crystal pins for our 16MHz crystal. Pins 8 and 22 are the ground pins. Onto the top right, pins 23 through 28 are the analog pins, and here we're using them for our accessory LEDs, since the ground microcontroller isn't using analog input functions. The remaining pins are digital I/O pins; certain pins are PWM able, but we're not using that function. Connected to pins 2 and 3, RX and TX respectively, is our XBee module, seen later. Pins 4, 5, and 6 go to the 7-segment shift register and pins 11, 12, and 13 control the digit display for the 7-segment. Pins 14, 15, and 16 go to the LED bar shift registers. Pins 17 and 18 involved the trigger and echo pins for the proximity sensor we're using. Finally, pin 19 controls the relay to turn on the oscillator and fans; it is also connected to the Battery Charging LED indicator. The car microcontroller can be seen in Figure 4.11.2, and is completely identical on the left side. On the right side, the microcontroller is just reading the analog voltages of the temperature sensor and voltage divider circuit, and sending them to the XBee via pins 2 and 3 (not shown).

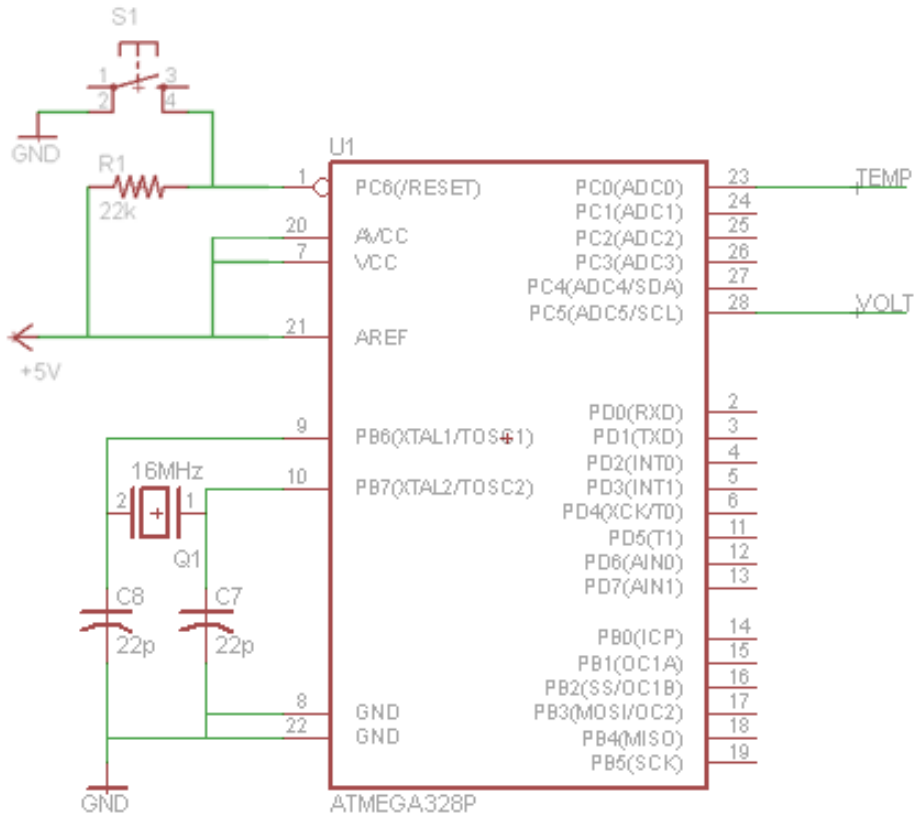

Figure 4.11.2 – ATMEGA32P Car Microcontroller

The next component is the XBee module, shown in Figure 4.11.3. Starting from the top, pin 1 is 3.3VDC power. Pins 2 and 3 are TX and RX respectively, and connected to the microcontroller. The last pin used is pin 10, ground. All other pins were left disconnected because they were unused. We used transparency mode for the XBee modules, which means data is sent through the modules, as opposed to API mode, where data is sent to the modules and the module components can be programmed via X-CTU to use those pins. For our needs, transparency mode was the easiest to use. Both the ground and car systems have the above XBee module setup.

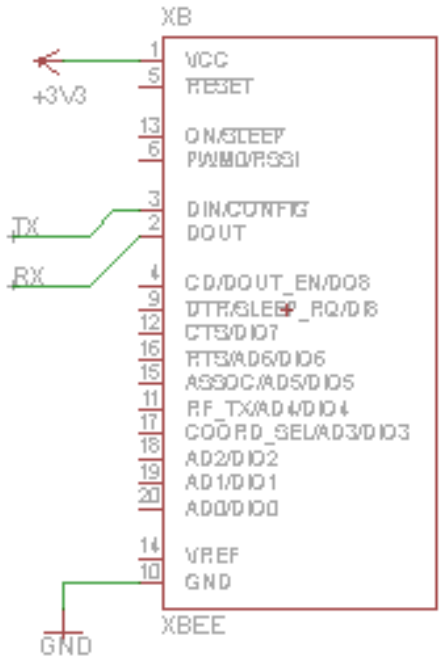

Figure 4.11.3 – XBee Module

4.12 Oscillator

The oscillator generates the resonant frequency required to oscillate the ground coil. Oscillations are limited when resistance is taken into consideration, either from a resistor component or resistance due to the inductor windings. We have quite a few designs to choose from for this section; however, we limited our selection to three. The first one shown in Figure 4.12.1 is derived from the zero voltage switching (ZVS) driver circuit. It is a very simple circuit that can oscillate a large amount of power with about 90% efficiency.

When power is applied at +V terminal current starts to flow through both sides of the primary and to the MOSFETs' drains. Simultaneously that voltage appears on both of the MOSFETs' gates and starts to turn them on. Because no two components are exactly alike, one MOSFET turns on slightly faster than the other allowing more current to flow through the MOSFET that is on. The extra current flowing on that side of the primary steals the gate current from the other MOSFET and starts to turn it off. A capacitor forms an LC tank with the coil and the voltage proceeds to rise and fall as a sinusoid. As stated before, this oscillator involves zero-voltage switching (ZVS), meaning that the MOSFETs switch when they have zero volts across them. This is good because it allows the MOSFETs to switch when they are carrying the least power—something that, for the most part, eliminates the switching losses which generate huge amounts of heat.

The circuit has two IRFP250 power MOSFETS to handle the power drawn by the transmitting coil. These will have to be mounted to a heat sink to effectively dissipate the heat generated in their operation. The zener diodes (1N4740A) are used to maintain constant amplitude in the oscillations and the two ultra-fast avalanche sinterglass diodes (BYV26E) are capable of handling the reasonably high operating current and fast switching of the circuit. The receiver section of this configuration consists of a coil made up of 5 turns in parallel with a bank of capacitors that is used to tune the receiver coil's tank circuit to match the resonant frequency of the transmitter coil.

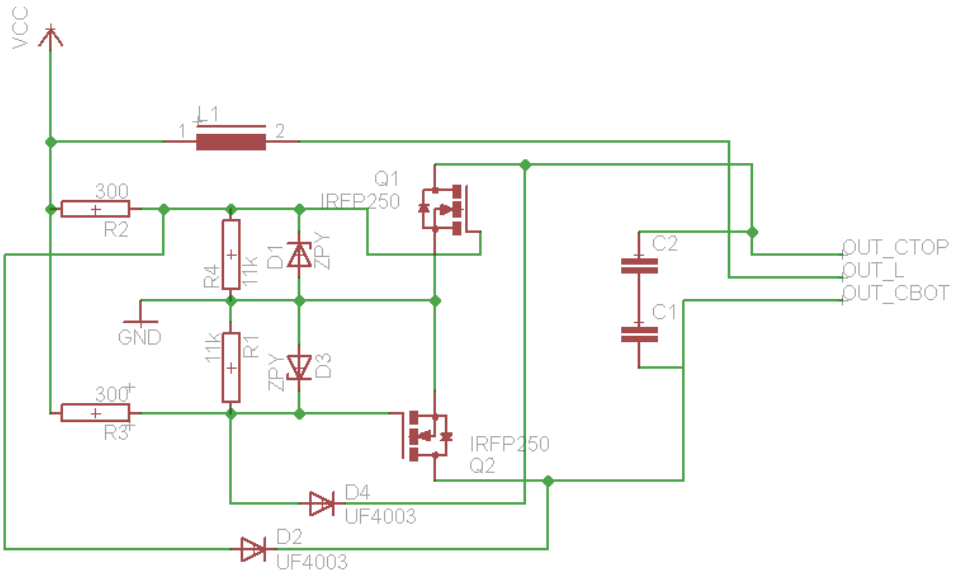

Figure 4.12.1 – Wireless Power transfer oscillator circuit diagram

Another oscillator design that we considered was the Colpitts Oscillator shown in Figure 4.2.2. The circuit consists of a single stage inverting amplifier and an LC phase shift network. The two series capacitors C1 and C2 form the potential divider used for providing the feedback voltage – the voltage developed across capacitor C2 provides the regenerative feedback required for sustained oscillations. Parallel combination of Re and Ce along with resistors R1 and R2 provides the stabilized self-bias. The collector supply voltage V_{CC} is applied to the collector through a radio-frequency choke (RFC) which permits an easy flow of direct current but at the same time it offers very high impedance to the high frequency currents. The presence of coupling capacitor Cc in the output circuit does not permit the dc currents to go to the tank circuit. The flow of DC current in a tank circuit reduces its Q-factor and for our circuit a high Q-factor is desired. The radio-frequency energy developed across RFC is capacitively coupled to the tank circuit through the capacitor Cc.

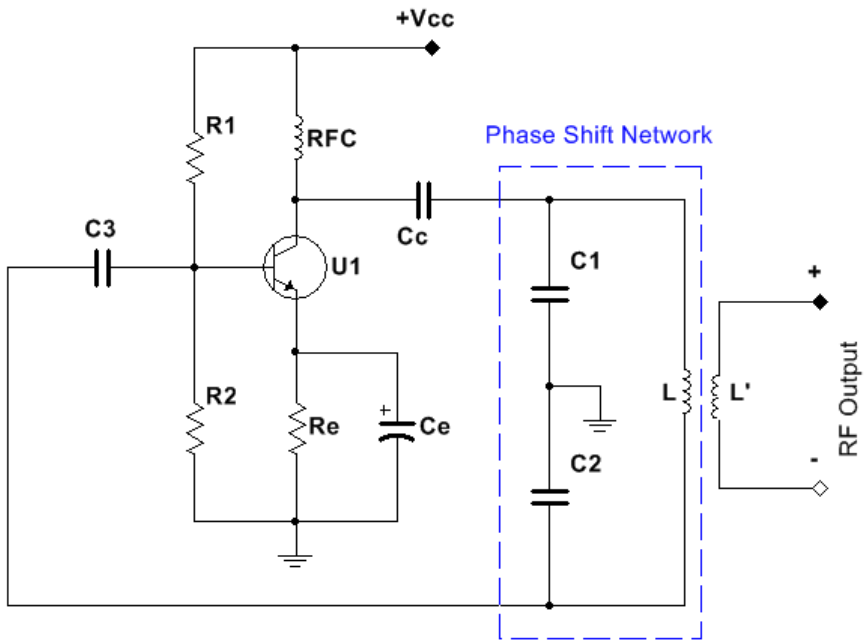

Figure 4.12.2 – Basic Circuit for Colpitts Oscillator

The output of the LC phase shift network is coupled from the junction of L and C2 to the amplifier input at base through coupling capacitor CC, which blocks dc but provides path to AC. The transistor itself produces a phase shift of 180° and another phase shift of 180″ is provided by the capacitive feedback. Thus a total phase shift of 360° is obtained which is an essential condition for developing oscillations. The output voltage is derived from a secondary winding L' coupled to the inductance L. The frequency is determined by the tank circuit and is varied by gang-tuning the two capacitors C1 and C2. It is to be noted that capacitors C1 and C2 are ganged. As the tuning is varied, values of both capacitors vary simultaneously, the ratio of the two capacitances remaining the same. The frequency of oscillations is determined by:

$$f = \frac{1}{2\pi\sqrt{\frac{1}{LC1} + \frac{1}{LC2}}}$$

We also looked into the Hartley oscillator as a possible candidate for our oscillator design. This oscillator is just as popular as the Colpitts oscillator and is widely used as local oscillators in radio receivers. The simplified circuit diagram is shown in Figure 4.2.3 and it can be seen that the Hartley Oscillator circuit is quite similar to the Colpitts oscillator circuit with the main difference being found in the configuration of the phase shift network. The Hartley consists of two inductors L1 and L2 and a capacitor while the Colpitts has two capacitors and one inductor.

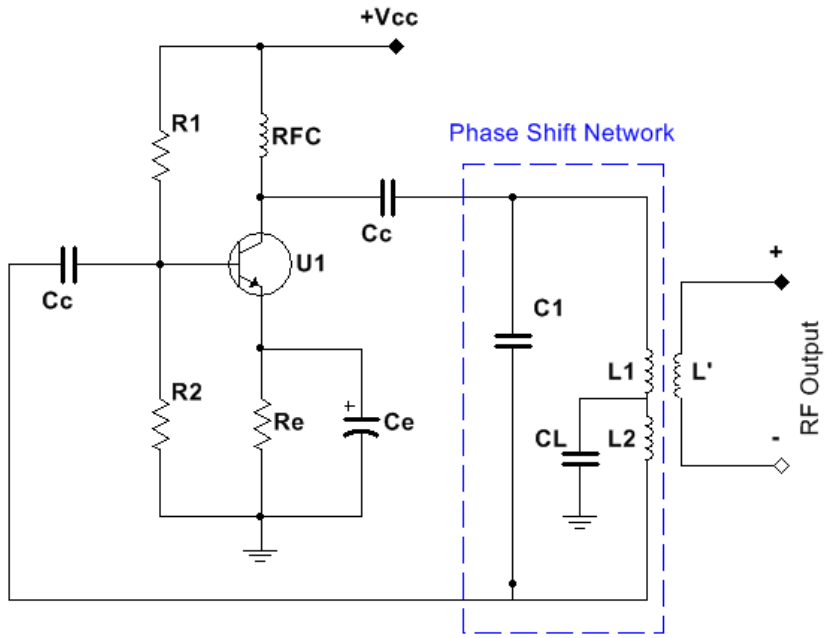

Figure 4.12.3 – Basic Circuit for Hartley Oscillator

The output of the amplifier is applied across inductor L' and the voltage across inductor L2 forms the feedback voltage. The coil L1 is inductively coupled to coil L2, the combination functions as an auto-transformer. However, because of direct connection, the junction of L1 and L2 cannot be directly grounded. Instead, another capacitor CL is used. The operation of the circuit is very similar to that of the Colpitts oscillator circuit.

Since L1 and L2 are wound on the same core, there exists mutual inductance between the coils and their net effective inductance is increased by mutual inductance *M*. Therefore, the effective inductance is given by:

$$L = L1 + L2 + 2M$$

Therefore the resonant or oscillation frequency is given by:

$$f = \frac{1}{2\pi\sqrt{LC}}$$

The frequency of the Hartley oscillator can be easily adjusted by varying the inductances which may be achieved by making the core movable or varying the capacitance. Hartley oscillators are not suitable for low frequency work because at low frequency, the value of inductance required becomes large and for this reason it may not suit our design if we have inductor size constraints.

We decided to go with the ZVS design because of its fairly simple design and its ability to handle a substantial amount of power. We had to choose MOSFETs rated

at 4x the input voltage being fed to the oscillator. We also had to be careful not to place them on the same heat sink as that would electrically connect both drains. For the capacitor we had to use mica or Mylar because an electrolytic capacitor in this application would explode.
The frequency of this resonance is determined by the inductance of the ground system coil and the capacitance across it. The relationship is given by;

$$f = \frac{1}{2\pi\sqrt{LC}}$$

Too much gate current can cause damage so the 470Ω resistors limit the current that charges the gates. The 11kΩ resistors are used to pull the gates down to ground to prevent the MOSFETs from latching. The12V Zener diodes prevent the gate voltage from exceeding 12volts and for maintaining constant amplitude in the oscillations.
When the voltage on the opposite leg of the tank is grounded, the UF4007 diodes pull the gates down to ground; they are also capable of handling the reasonably high operating current as well as fast switching of the circuit. Finally, to improve the overall performance of the circuit, we charge the gates with VCC and discharge them via the LC tank circuit using the ultrafast diodes.

Due to parts availability and design constraints the resonant frequency was determined to be 100kHz; however this design is quite sufficient for our needs.

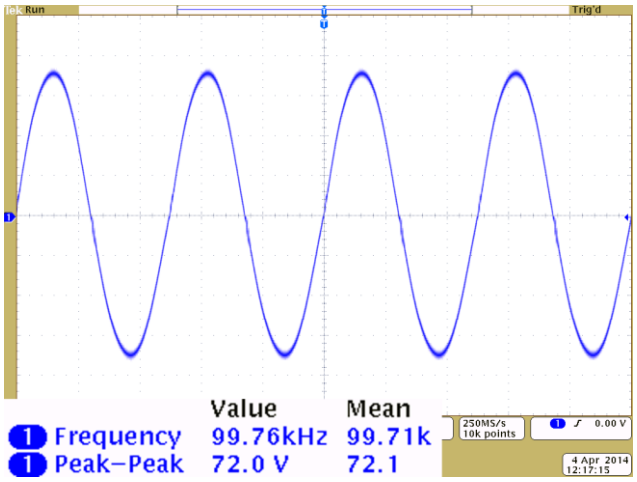

Figure 4.12.4 – Oscilloscope trace of output frequency and voltage of the transmitting coil.

5 Design Summary of Hardware and Software

This section summarizes Section 4 and pieces everything together in a single circuit, so as to make sure no one piece is incorrect in any way. Below will include detailed diagrams of the ground system and the car system. Also there will be detailed logic flow diagrams summarizing the coding process required for the software side. Software and coding implementation will be discussed in detail in Section 6.3 Final Coding Plan as this is just the code design.

5.1 Hardware Design

We shall start off at the AC source and follow the flow of power from the ground system to the car system, looking into each circuit along the way. Figure 5.1.1 on the next page takes a look into the ground system's power distributor. From the home outlet (120V AC source), the two AC lines enter the power distributor into a transformer that brings down the power to 24VAC. For safety and protection there is an installed kill switch before the transformer. A rectifier converts this signal to DC and then it goes through a 250VAC/5A fuse. The 24VDC line then goes to the relay and is also regulated to 12VDC. The 12VDC line also goes to the relay and is also regulated to 5VDC. The 5VDC line powers most of the ICs on the board, save the 3.3VDC XBee module. The relay, when switched on via the microcontroller, will connect the 24VDC line to the oscillator and the 12VDC line to the fans for cooling. Table 5.1.1 gives a short summary of the power nodes that are present in the ground system.

At the end of this section there will be a compilation of our ground and car systems in EAGLE. Figure 5.1.9 shows the compilation of the ground system. Figure 5.1.10 shows the compilation of the car system. Figure 5.1.11 shows the PCB board layout at time of printing for the ground system (yes, there are mistakes). Figure 5.1.12 shows the PCB board layout at the time of printing for the oscillator circuit. Due to time and budget constraints, out car system was built on a perforated board, along with the LED displays. Measurements on the boards are in millimeters.

Table 5.1.1 - Ground System Power Nodes

Node	Type	From	To
DC	24VDC power	Rectifier	Fuse
+24V	24VDC power	Fuse	Relay, 7812
AC+/AC-	AC power	Transformer	Rectifier
+12V	12VDC power	7812	Relay, 7805
+5V	5VDC power	7805	ICs, 3940
+3V3	3.3VDC power	3940	XBee
GND	Ground		

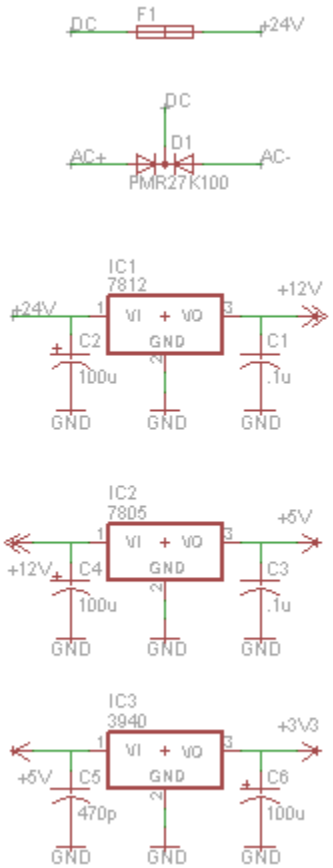

Figure 5.1.1 - Ground System Power Distributor

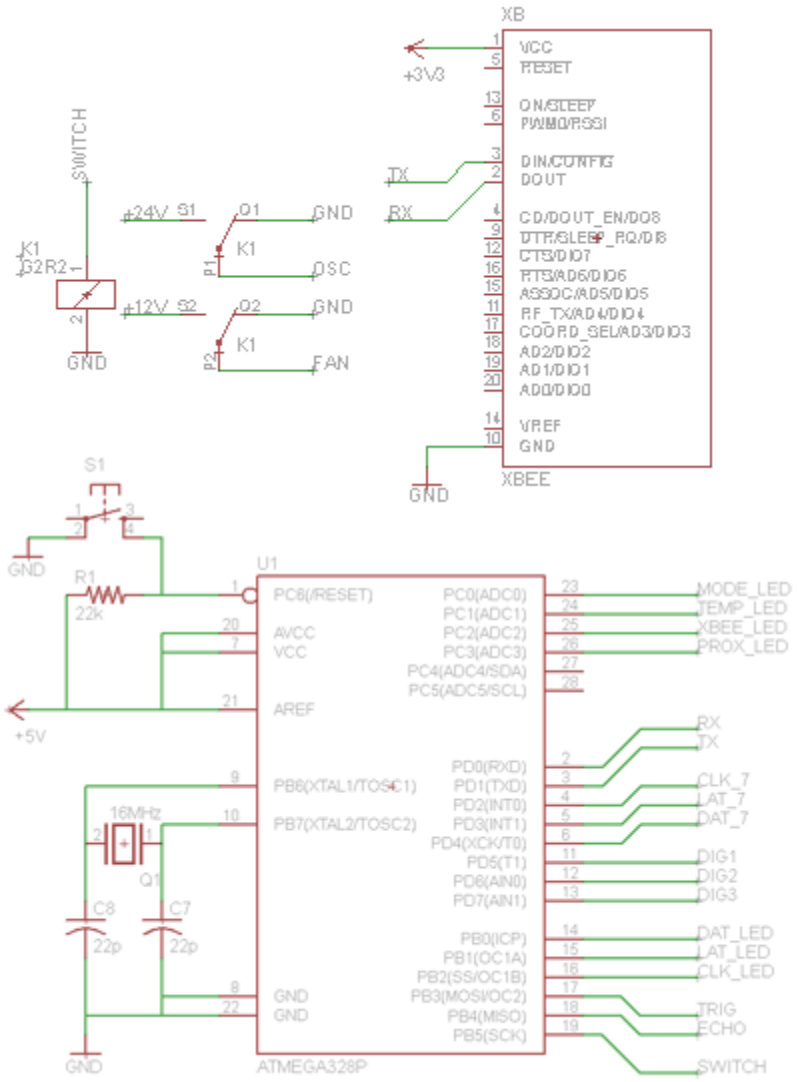

Figure 5.1.2 - Ground System MCU

The next few circuits to review are the ground system's microcontroller and connections, and the LED displays and other off-board connections. The ground system's microcontroller can be seen in detail in Figure 5.1.2. The LED drivers and their connections to headers on the board can be seen in Figure 5.1.3 on the next page. This also includes the proximity sensor's headers.

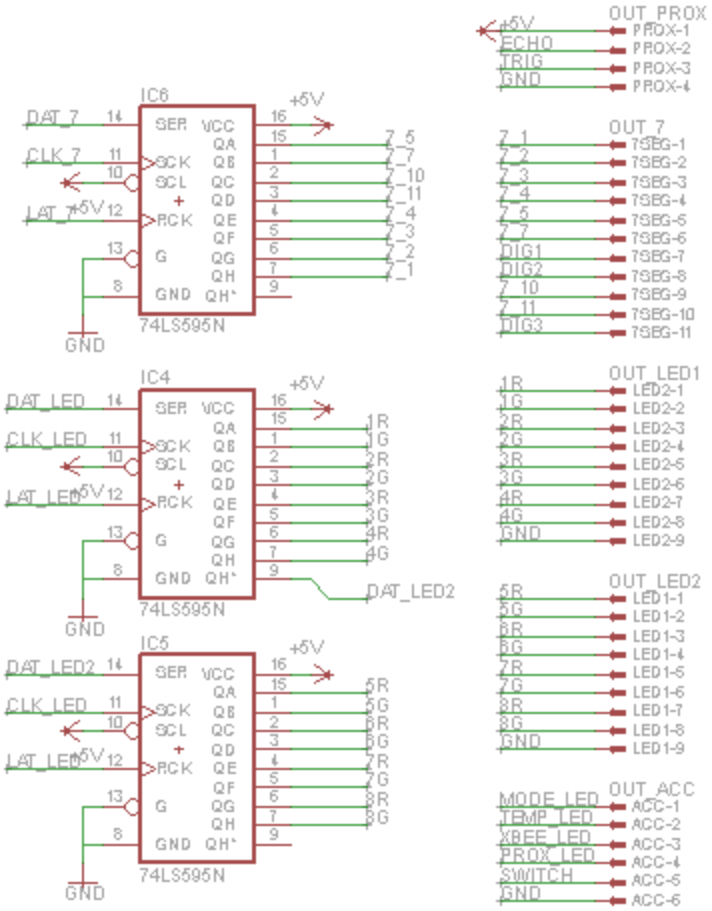

Figure 5.1.3 - LED Displays

From the shift registers, the data lines go to headers located at the edges of the PCB. There are 5 headers located on our ground PCB, they are OUT_PROX for the proximity sensor, OUT_7 for the 7-segment display, OUT_LED1 and OUT_LED2 for the LED bar display, and OUT_ACC for the indicator LEDs. Shown in Figure 5.1.4, the oscillator sits on its own PCB right next to the ground transmitting coil. The three nodes on the right, OUT_CTOP, OUT_L, and OUT_CBOT, connect to the coil directly, with the top and bottom nodes connecting to the ends of the coil and the middle node connecting to the center of the coil, hence center-tapped. Detailed information can be found in section 3 and section 4 regarding the oscillator.

The car system is not as complicated as the ground system. We'll start with the car system's power, MCU, buck converter, and charge controller. Figure 5.1.5 shows the car system's power distribution. COIL1 and COIL2 come from the receiving coil on the car and goes through a bridge rectifier. The output, RDC, is unregulated DC which goes straight into the buck converter. The linear regulators are used for the ICs of the car system and are identical to the ground system.

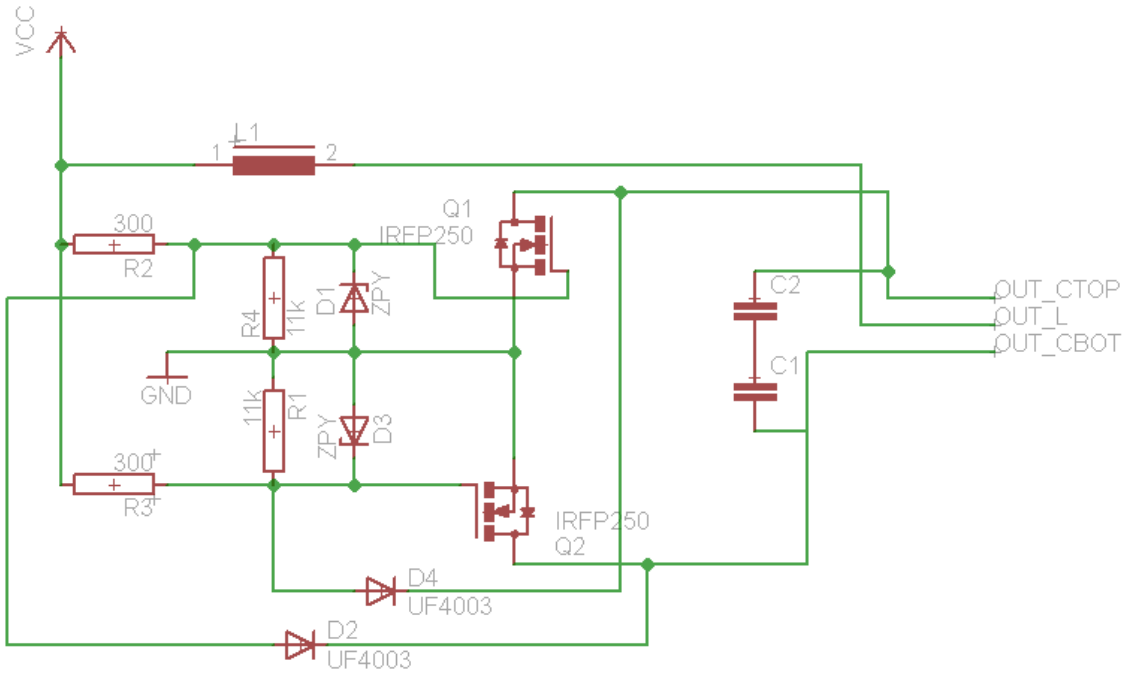

Figure 5.1.4 - Oscillator

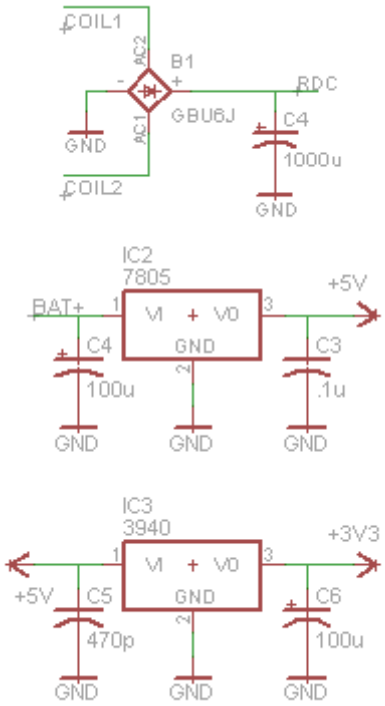

Figure 5.1.5 - Car System Power Distribution

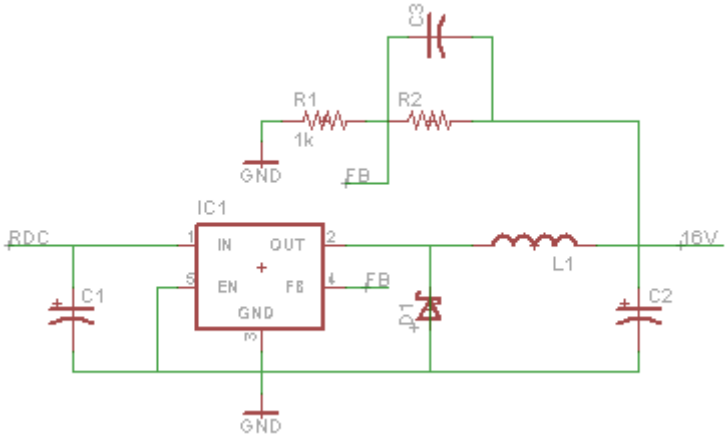

Figure 5.1.6 - Buck Converter

The buck converter, seen in Figure 5.1.6, takes the unregulated DC, RDC, and regulates it to a usable voltage for our charge controller, in our case 16VDC. This buck converter was tuned using resistor and capacitor values as detailed in section 3 and section 4 regarding the buck converter. The charge controller, seen in further detail in Figure 5.1.7, is the circuit that actually charges the battery. With a supply of 16VDC from the buck converter, the remaining current from the power conversion feeds the charge controller to charge the battery. Our circuit has built in LEDs to see if power is on, and if the battery is fully charged. The potentiometer R13 allowed us to tune the circuit to be "full" at 14V.

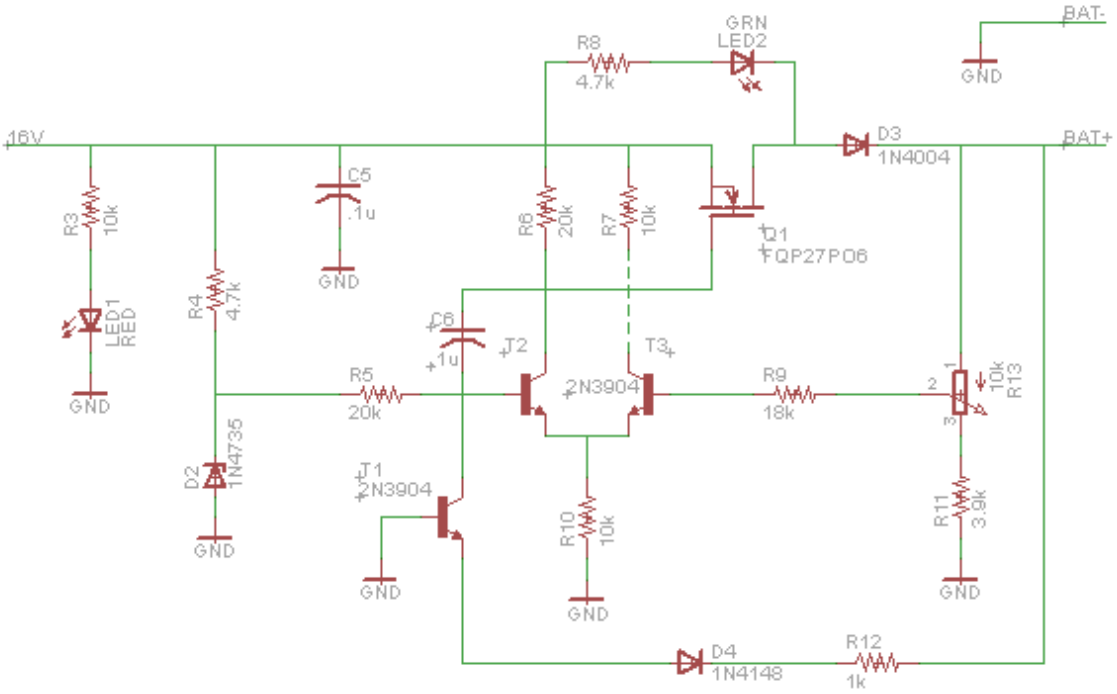

Figure 5.1.7 - Charge Controller

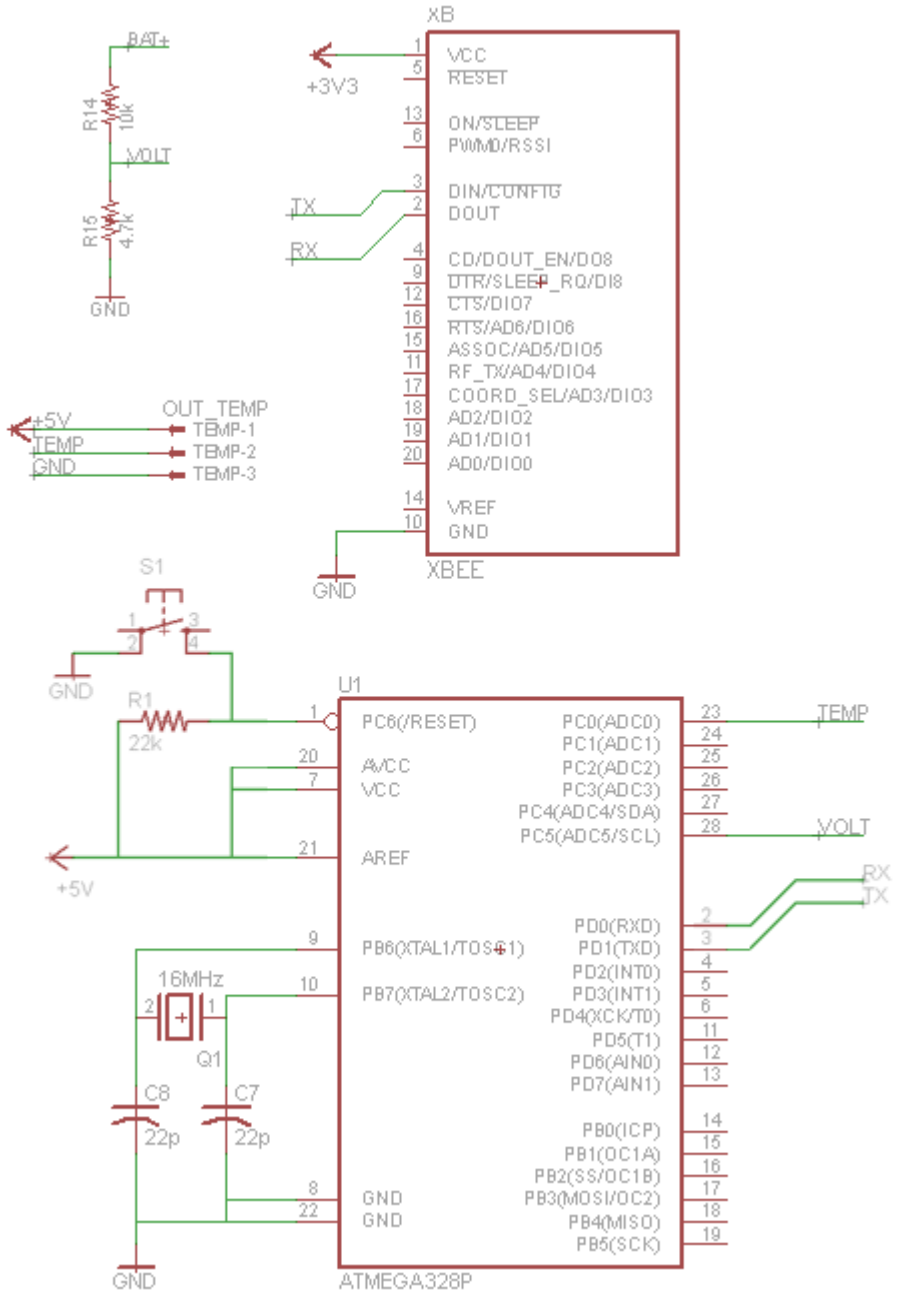

Figure 5.1.8 - Car System MCU

The car system MCU is similar, except as explained before, and only involves the four pins on the right. The only header involving the MCU is for the temperature sensor, which involves power, ground, and the analog line for data. Another header, that connected the AC from the coils and the positive and negative node of the battery, is also located on the car system board. From that header is where the positive node connects to power the MCU and ICs, and it's also where we get the BAT+ voltage for the voltage divider circuit to read the battery's voltage level without damaging the 5V microcontroller.

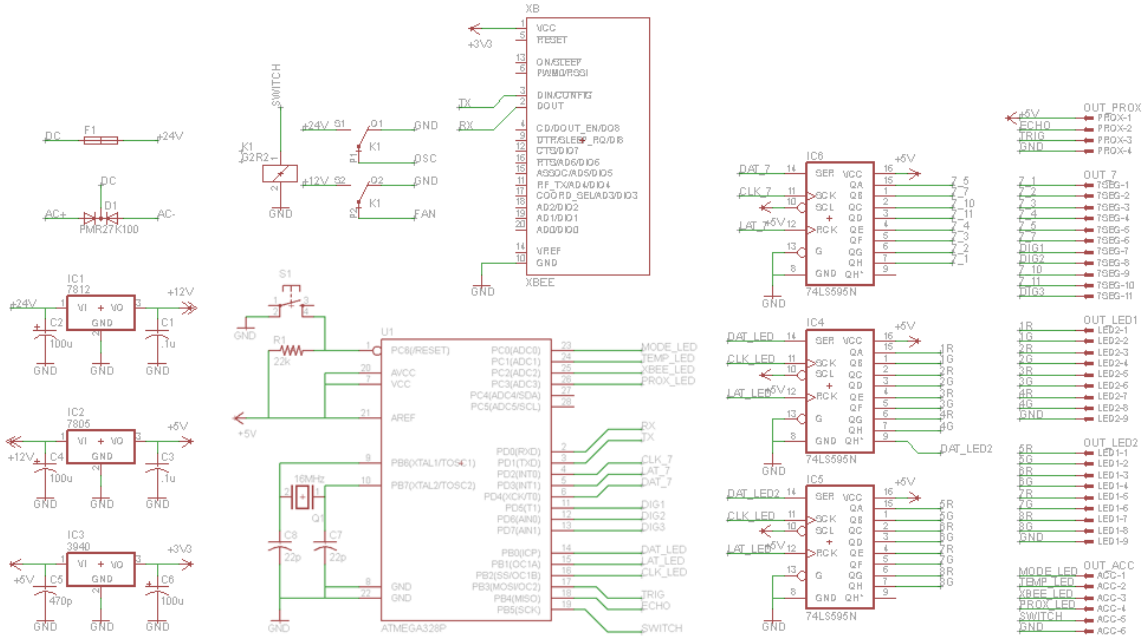

Figure 5.1.9 - Ground System EAGLE Schematic

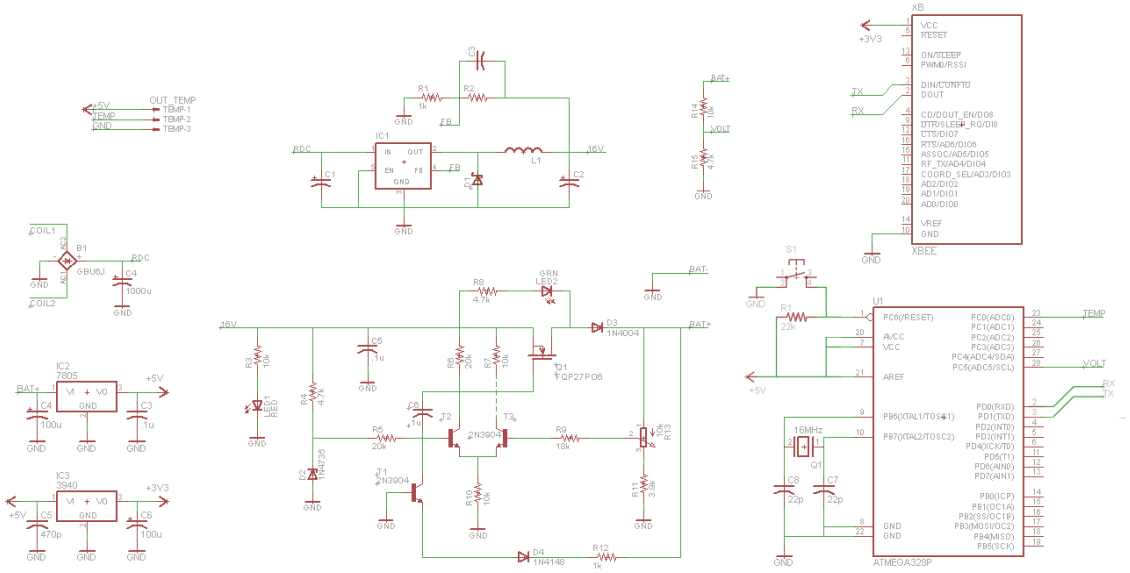

Figure 5.1.10 - Car System EAGLE Schematic

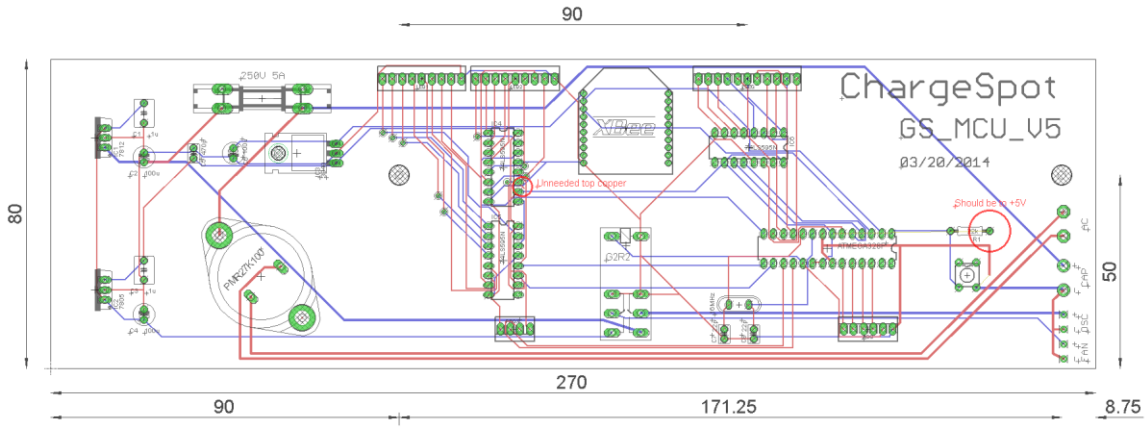

Figure 5.1.11 - Ground System EAGLE Board

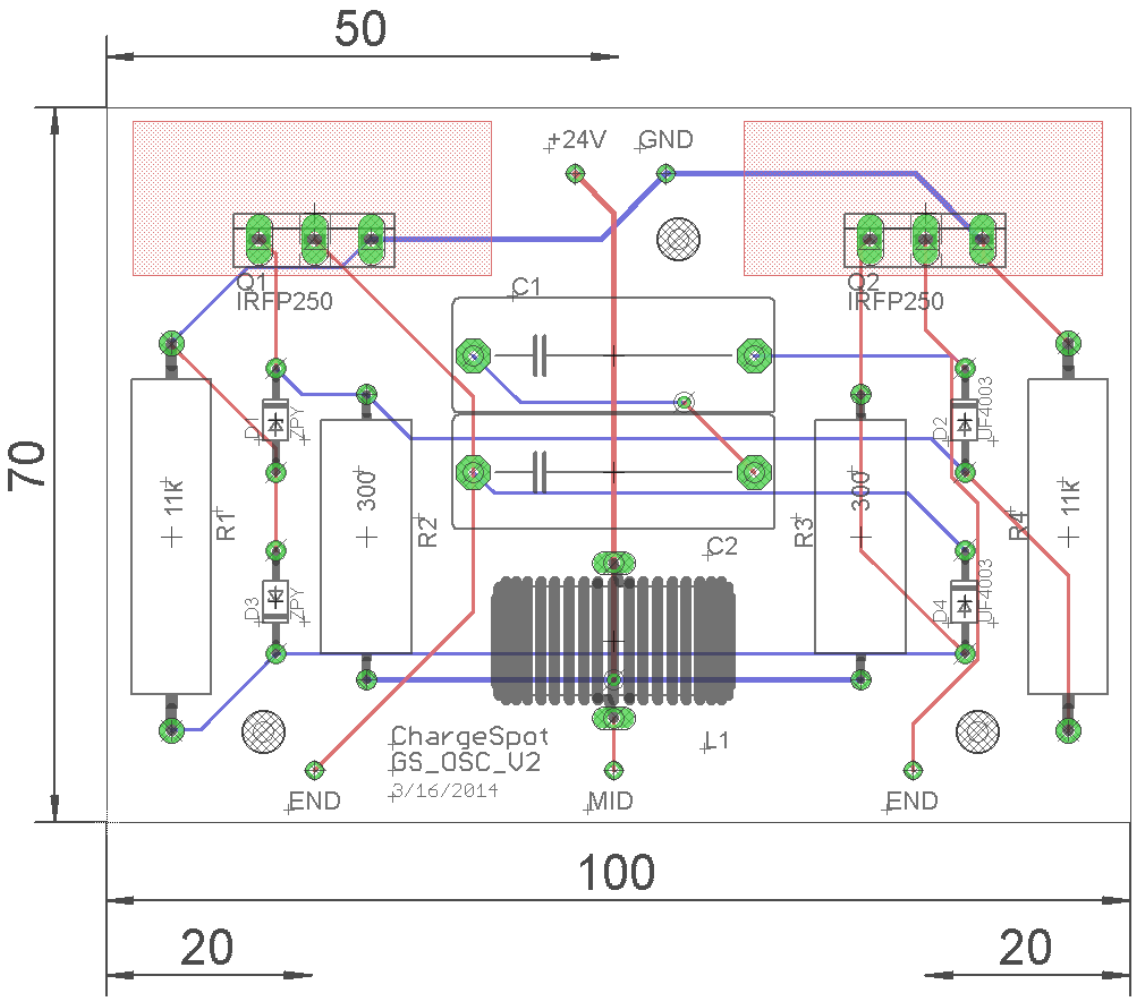

Figure 5.1.12 - Oscillator EAGLE Board

5.2 Software Design

Concerning the software side of our project, there are two main routines, one for each system. Starting with the ground system, its purpose is to collect data from the XBee module and proximity sensor, and send relevant data to the displays while using other data for control over the relay.

Figure 5.2.1 shows the logic flow diagram of the ground system's microcontroller. Startup will initialize variables and flags that will be used throughout this flow and also initiate a self-test for the LED displays. The microcontroller will then listen to both proximity and XBee, and will only continue if both of those are being detected. The XBee modules on both systems will be pre-programmed to only be able to communicate with each other (channel 2498). Once these conditions are met, proximity will be read and displayed to the LED bar display--it starts in proximity mode. Once a pre-determined proximity reading is met, the proximity flag will be set and the microcontroller will switch modes to charging mode and flow to marker A. The flow continues to Figure 5.2.2.

From marker A, the XBee module is now read (BT Temp and BT Voltage). These values are displayed to the 7-segment display and LED bar display, respectively. Following the entire flow, we'll assume the BT Voltage is not 100%, so then the flow asks if the BT Temp is within a pre-determined range. If not, the flow will loop until it is, and that's when the relay is turned on. To prevent the Oscillator and the surrounded components from overheating, we have cooling fans that turn on when the Oscillator is on, via the relay.

The logic flow diagram for the car system is a lot simpler than the ground system counterpart, seen in Figure 5.2.3. Starting the flow, variable and flags are initialized and the microcontroller waits until XBee is detected. Once detected, the battery temperature (Bat Temp) and its voltage (Bat Voltage) are read, and sent to the ground XBee for display and processing. Timing is a crucial element across all systems, and everything must be timed together to work, especially due to the LED displays. Further details about program implementation can be found in Section 6.3 Final Coding Plan, details about testing can be found in Section 7.3 MCU Testing.

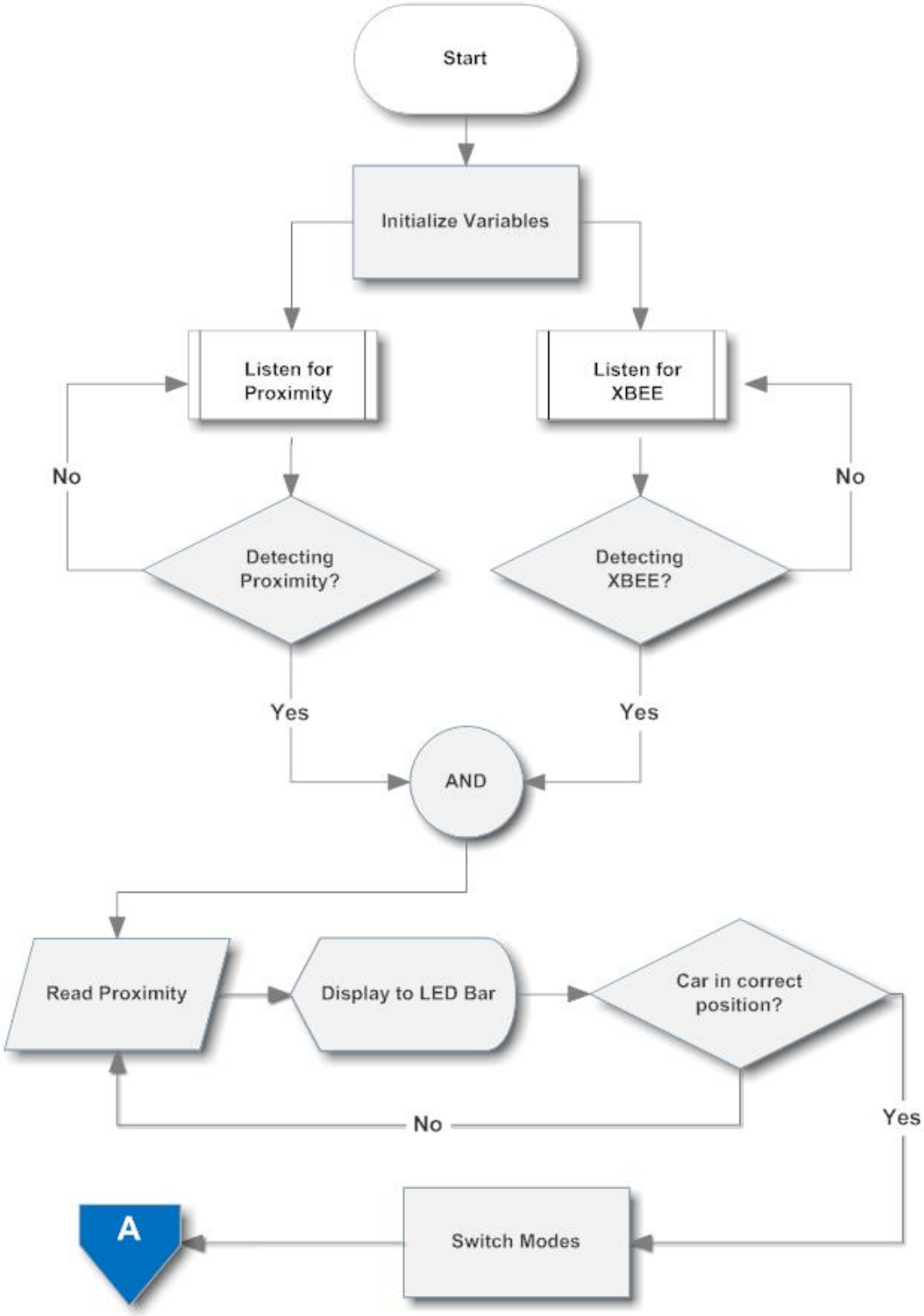

Figure 5.2.1 - Ground System Logic Flow Diagram Part A

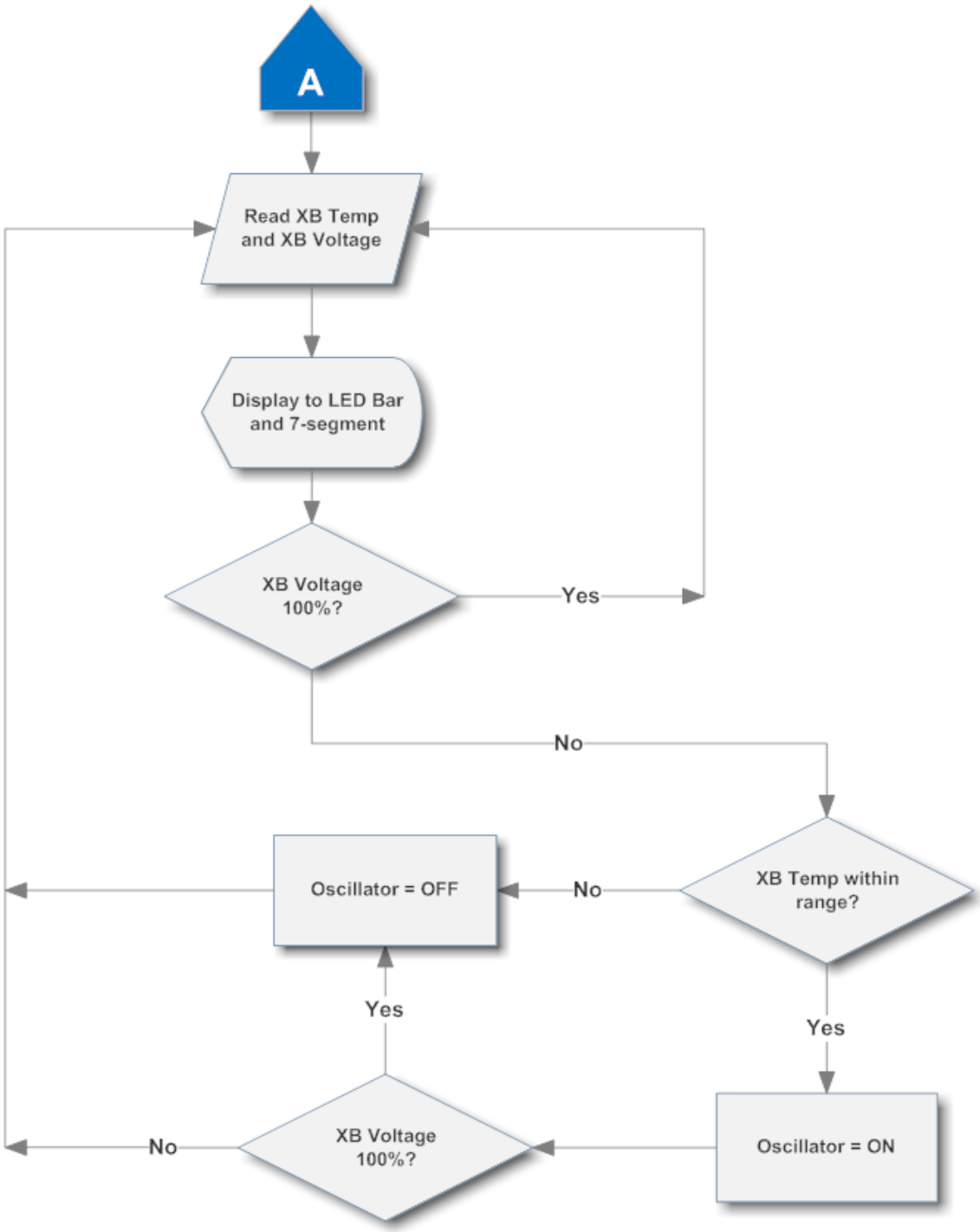

Figure 5.2.2 - Ground System Logic Flow Diagram Part B

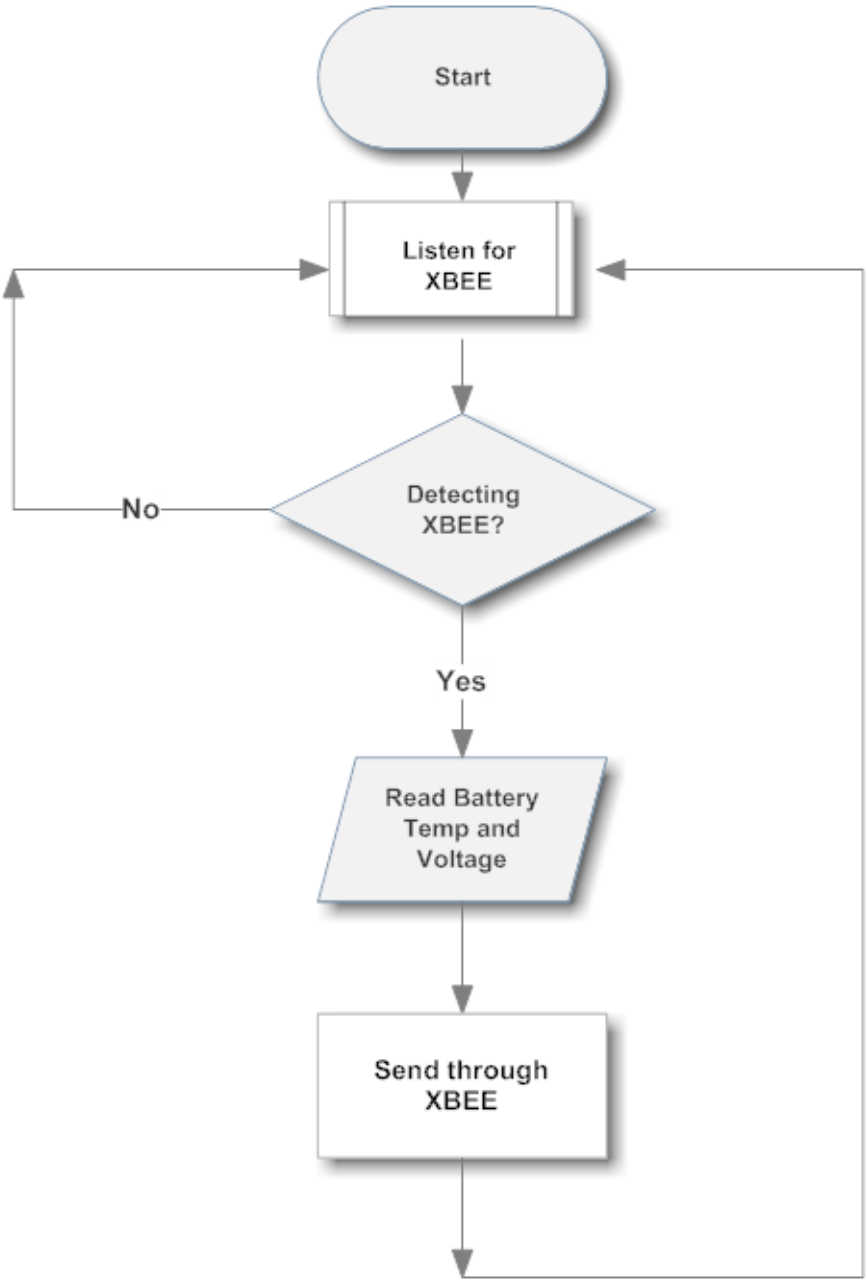

Figure 5.2.3 - Car System Logic Flow Diagram

6 Prototype Construction and Coding

Now that the designing is out of the way we need to make sure we can build it. This section outlines all parts decided upon from Section 3.5 Parts Research. We will also look at PCB vendors and discuss integration and assembly of the circuit boards and parts. Finally we'll take a detailed look into the coding aspect in the software, but not so detailed that you'll just be reading code. A further look into finance can be found in Section 8.2.

6.1 Parts Acquisition

The following tables provide a specific parts list for our prototype construction. Table 6.1.1 lists the specific parts and cost for all the components covered in the parts research section. Details about each table can be found in Section 9.1 (especially regarding “assorted components”) and budget details can be found in Section 8.2. The following table only includes the part/s we used for our final prototype, and do not include failed design parts or redundant parts and their prices.

Table 6.1.1 - Specific Parts List Summary

Part	***Specific Part/s***	***Cost***
Control Panel	Steel Junction Box	$5.00
Proximity Sensor	HC-SR04 Ultrasonic Sensor	$7.00
LED Displays	Assorted components	$29.47
Kill Switch	DPST Push Button Switch	$5.38
Fan	12V computer fans	$0
Power Distributor	Assorted components	$54.03
Charge Controller/Buck	Assorted components	$76.98
Vehicle/Battery	PowerWheels with 12V/18Ah	$119.99
Temperature Sensor	ZTP-115M Temperature Sensor	$11.88
Microcontroller	Atmel ATMEGA32P	$11.85
Wireless Module	XBee Series 1	$45.90
Oscillator	Assorted components	$50.11
Coil, Conduit, Mounting	Assorted components	$79.94

6.2 PCB Vendor and Assembly

Now that we have our design and part picking out of the way, we could now start to assemble our circuits. It is required that we design our own circuit boards and have them crafted from a PCB vendor, instead of using a pre-made development board such as an Arduino board. However, this is only for the final product and presentation--we can use boards like Arduino for testing purposes. We designed our own Gerber files in CadSoft EAGLE for the ground system PCB and oscillator PCB. Everything else was done on a perforated board.

To get a quote from our PCB vendor they needed our Gerber file. Since we used Advanced Circuits, also known as 4PCB.com, they have a tool that takes the Gerber file and makes sure it can be printed, plus it gives you a quote based on how many you need. The main reason we chose Advanced Circuits was because they had student discount deals which we took advantage of. Once we obtained our PCBs, we needed to place the parts onto the board. Since we designed with this in mind, almost all of our components are through hole, which made soldering easy. We also had this in mind for our perforated boards, and the components that required larger holes we used a drill for fitting (even for the heat sinks). Every group has at least one mistake on their first PCB. Everyone. For our ground system PCB, we had to fix the reset connection by scratching it out and jumping the nodes. Also, in retrospect we should've used thicker copper lines for the 24V and 12V lines. The oscillator board was perfect, and the only problems were on the printer's end; for some reason they neglected to print the top layer of copper for the board. This slightly slowed us down, but we just jumped all the necessary connections. Figure 6.2.1 shows the car system perforated board, populated, and Figure 6.2.2 shows our un-populated PCBs straight out of the shipping packet.

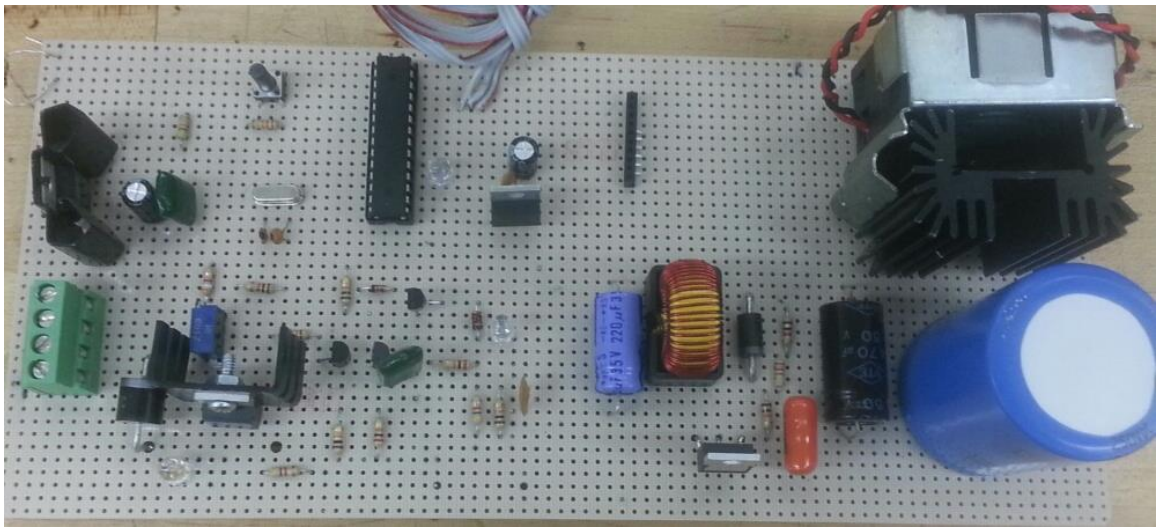

Figure 6.2.1 - ChargeSpot's Car System Perforated Board

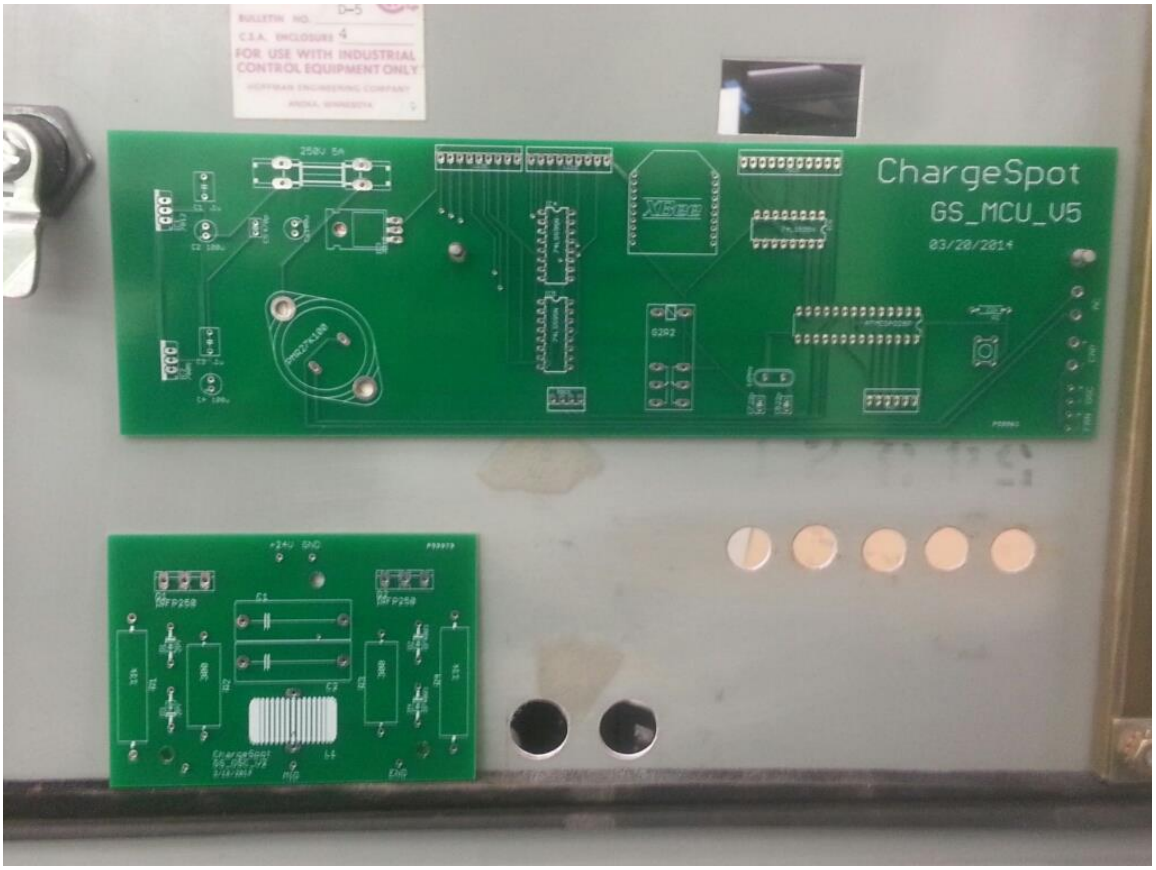

Figure 6.2.2 - ChargeSpot's two PCBs

6.3 Final Coding Plan

Our software design, as shown in Section 5.2, will be implemented and tested using Arduino IDE. This is a free-to-download and free-to-use application that allows customers of Arduino boards to program and debug their microcontrollers. Using our Arduino UNO development board for our ATMEGA32Ps, we can program our microcontrollers for their specific purpose in each system. Tests were ran to make sure our coding works and the microcontroller's pins are acting accordingly; further explained in Section 7.3. Another piece of our MCU board that had optional programming was the XBee module. However, we didn't want to leave the XBee module in its default state, that is, default channel. If other groups used the XBee and didn't change their channels (a few groups), there would definitely be interference. We went ahead and used X-CTU to change our channel to 2498 for both modules, so that only they could talk to each other. Also, since we were using transparency mode, nothing else had to be programmed for the XBee module.

7 Prototype Testing

In this section we discuss the specifics of testing our prototype. First are the test environments for the hardware and the software. Then we look into our procedures for testing the coil's wireless energy transfer--the whole point of this project. Afterwards we look into MCU testing for both systems, and their XBee connectivity between each other (making sure they can communicate). Lastly, we look at overall system testing once we have all the subsystems working. This was the last phase of testing.

7.1 Hardware/Software Test Environments

Testing the hardware was crucial before integrating everything together and finding out a subsystem has failed, therefore having to disassemble everything and find out the issue. The software testing could be performed virtually anywhere. As far as the hardware testing goes, we divided it up by car system and ground system. Once each subsystem was completed/finalized, we tested it to make sure it works with other subsystems that it connected to. For instance, the Oscillation subsystem needed to successfully connect to the Relay (a given subsystem) and also successfully connect to the Power Distribution subsystem to power everything on the ground system side. To make things easier, we planned to test each subsystem as soon as each is finished, rather than waiting for all subsystems to be completed, then testing, then figuring out which subsystem/s is/are at fault. Once each stand-alone system and subsystem were harmoniously working with each other, we integrated them into their final placements.

For the car system, everything was mounted in their allocated space on the perforated board, which fit perfectly in the under-seat compartment. For the ground system, everything was placed on or in the control panel. At this point, everything was assembled and, in theory, should work like a charm. Here is when a lot of things went wrong. However, by isolating each subsystem, we learned what caused the problems and tried correcting it as best we could. A lot of our problems were human error, such as loose connections.

For our systems to work, the most important condition that must be met (other than it actually being powered via home outlet) was that the battery was less than one hundred percent charged. If the battery is fully charged, the systems would recognize that and not do anything other than display it. But we wanted to make sure our wireless charging worked--the purpose of this senior design project. To drain the battery, we can simply connected it to the test vehicle and drove it around the engineering building for a few laps. We used a digital multimeter to read the battery's voltage at full charge and at other levels of charge.

7.2 Energy Transfer Testing

The following tests will be used to validate the integrity of the wireless power transfer system that we have designed. This includes a height distance test, alignment test and efficiency test.

Height Distance Test

Purpose and Objective: The height distance check is an important aspect of our design as we want to ensure that maximum charging efficiency is obtained at the predetermined height of the vehicle. Since the average height of a power wheels car is approximately 3.5 inches our design should work flawlessly within that range. The main objective of this test is to verify the output power received by the charge controller when the height of the receiver coil is varied. Figure 7.2.1 shows our results.

Supplies:

- Voltmeter
- Ammeter
- Measuring tape
- Thin wooden variable platforms with coils attached
- Prototype charging apparatus
- 12V fan load

Procedure:

1. Disconnect rectifier circuit on car and connect the fan across the rectifier output leads.
2. Place the receiver coil on the wooden variable platform then place this directly on top of the transmitter coil secured to the ground.
3. Energize the transmitter coil by activating the oscillator.
4. Increase the height of the receiver coil one inch at a time and record the output voltage and current seen by the fan as well as the voltage and current experienced by the oscillator circuit.
5. Calculated input and output power from these pair of data sets using the product of the voltage and current to obtain power dissipation.
6. Transfer efficiency is calculated by $efficiency = \frac{Output\ Power}{\text{Input Power}}$

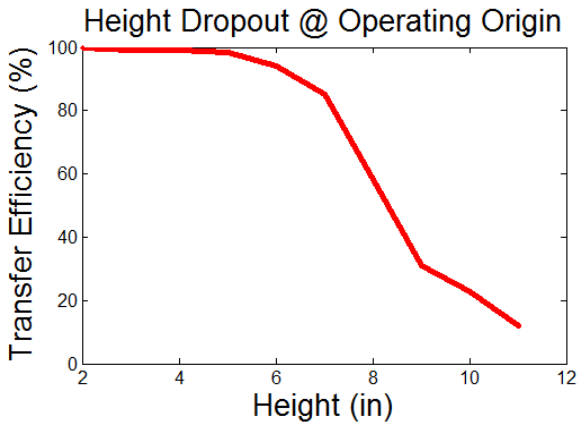

Figure 7.2.1 - This Height Dropout curve shows at what point from the origin (z displacement) of the transmitting coil will the receiving coil start receiving less than desired power.

Alignment Test:

Purpose and Objective: Once we have determined the height of our vehicle's undercarriage, we would like to know implications of misalignment between transmitter and receiver coil. The main objective of this test is to verify the output power received by the charge controller when the alignment of the receiver coil is varied while the transmitter coil remains stationary. Figure 7.2.2 shows our results.

Supplies:

- Voltmeter
- Ammeter
- Measuring tape
- Thin wooden variable platforms with coils attached
- Prototype charging apparatus
- 12V fan load

Procedure:

1. Disconnect rectifier circuit on car and connect the fan across the rectifier output leads.
2. Place the receiver coil on the wooden variable 3 inches above the transmitter coil
3. Start with the coils perfectly aligned above each other.
4. Energize the transmitter coil by activating the oscillator.
5. Move the receiver coil parallel to the ground, one inch at a time in any direction and record the output voltage and current seen by the fan as well as the voltage and current experienced by the oscillator circuit.
6. Calculated input and output power from these pair of data sets using the product of the voltage and current to obtain power dissipation.

7. Transfer efficiency is calculated by $efficiency = \frac{Output\ Power}{\text{Input Power}}$

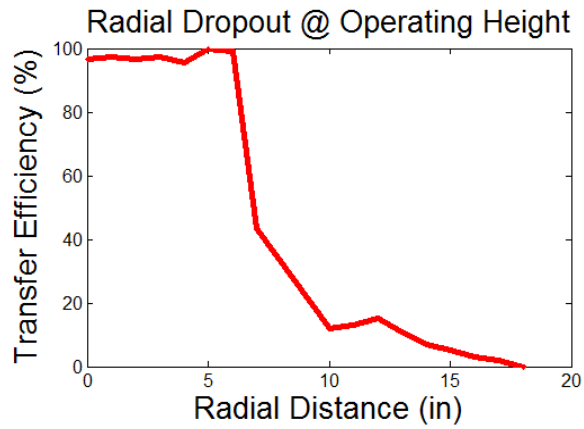

Figure 7.2.2 - This Radial dropout curve shows at what point from the origin (x-y displacement) of the transmitting coil will the receiving coil start receiving less than desired power.

Power Dissipation and Efficiency Test

Purpose and Objective: The efficiency of the wireless charging system tells us how much of the power being used to create the wireless energy transfer is actually making it to the charge controller. This also helps us in determining the feasibility of such the entire project.

Supplies:

- Voltmeter
- Ammeter
- Prototype charging apparatus

Procedure:

1. Connect the entire charging apparatus (battery included) with the car in place with receiver coil correctly aligned with transmitter coil
2. Energize the transmitter coil by turning on the oscillator
3. Use the voltmeter to measure and record the output voltage and ammeter to measure the current seen by the oscillator as well as the voltage and current experienced by the battery being charged.
4. Voltage and current measurements along with Power dissipation in the charging system are shown in Table 7.2.1.

Measurement Point	Voltage	Current	Power
Ground Systems (Oscillator Off)	23.8V	0.12A	2.86W
Ground Systems (Oscillator On)	21.6V	1.30A	28.08W
Car System at Charge Controller Output	14.0V	0.48A	6.72W

Table 7.2.1 – Power Efficiency Test results.

$$Power\ Efficiency = \frac{Power\ Received}{Power\ Transmitted} * 100\%$$

$$\frac{6.72W/0.9}{28.08W} * 100\% = \mathbf{26.59}\%$$

The above equations and data were used for our final calculations. Our efficiency goal was achieved for this project. We achieved an overall efficiency of 26.59% which is greater than the 20% efficiency listed in our project specifications.

7.3 MCU Testing

There are two MCUs within our project: one in the ground system and one in the car system. Each microcontroller has different tasks, so they aren't clones of each other. In order for them to communicate with each other, they will utilize an XBee module. This section is about MCU testing specifically, and communication between them is covered in Section 7.4 XBee Testing.

Pin Usage Test
Purpose and Objective: We need to determine if every pin on the microcontroller is working correctly, just in case it may be faulty and to save us a world of trouble when debugging. This test will ensure that the pins we will be using all work, and if there are problems, that it's not the microcontroller or pins.

Supplies:

- Microcontroller
- Development Board
- Resistors and LEDs
- Breadboard (optional)
- Power Supply
- Communication Interface for Coding (Arduino IDE)

Procedure:

1. Once the microcontroller is securely mounted on a development board, and connected to a computer for coding, place resistors and LEDs, in series, to each I/O pin to test them. Can be tested one at a time if limited resources are available.
2. Code the microcontroller to apply output of 1 if digital, or output of 3.3V if analog, to the pin/s you are testing.
3. If the LED lights up, the pin is working correctly. Remember to choose an appropriate value for the resistor. For the ATXMEGA32A4U, 165OHM should be used for 20mA and 330OHM should be used for 10mA, depending on your preference for LEDs.
4. Disconnect the resistor/s and LED/s and redo the test for other pins you wish to test.

If all the pins are working correctly, we can move on to the next test that will cover the MCU connections to all other devices. If this test fails, then we need to get another microcontroller if the I/O pins are the actual problem.

LED Displays Testing

Purpose and Objective: The microcontroller must be able to communicate to the user, and this is done via the LED bar display and 7-segment display. This tests the communication between the microcontroller and LED displays and makes sure all is well in the kingdom.

Supplies:

- Microcontroller
- Development Board
- LED displays (set up prior)
- Power Supply
- Communication Interface for Coding (Arduino IDE)

Procedure:

1. The microcontroller must be setup in correspondence to the LED displays and the pins assigned to them.
2. Start with the LED bar display and turn on each bar and each color at a time. Then do multiple bars and colors. Finally, turn them all on.
3. Next test the 7-segment display by turning on each segment of each character at a time, then start making recognizable characters, starting from 0 through 9, then A-F, including the decimal point.

4. Finally, combine the two codes and turn on both the displays and make sure they are both working correctly in accordance with the code.

So now the microcontroller can work with the LED displays. In the final code, a self-test is implemented that will turn on all LEDs on start up for a couple seconds. Also, all accessory LEDs should be tested and working, but that's simple since each is connected to its own pin.

Proximity Testing

Purpose and Objective: This is to test the connection between the microcontroller and proximity sensor. The data from the proximity sensor will be the echo input for the microcontroller, which will then send the corresponding data to the LED displays.

Supplies:

- Microcontroller
- Development Board
- Proximity Sensor (set up prior)
- Power Supply
- Communication Interface for Coding (Arduino IDE)

Procedure:

1. The proximity sensor should be powered.
2. Connect the trigger and echo lines from the proximity sensor to the appropriate microcontroller pin.
3. Using "Ultrasonic.h", code the microcontroller to read its value and create an output that can be placed into the LED bar display.
4. For added integration, you can test these values to the LED bar display.

The proximity values are taken into the microcontroller and digitized for 8 possible outcomes (for 8 LED bars).

Temperature Testing

Purpose and Objective: This is to test the connection between the microcontroller and temperature sensor. The data from the temperature sensor will be the analog input for the microcontroller, which will then be processed to give accurate temperature values.

Supplies:

- Microcontroller
- Development Board
- Temperature Sensor (set up prior)
- Power Supply
- Communication Interface for Coding (Arduino IDE)
- Temperature Source (stove)
- Temperature Reference (DMM)

Procedure:

1. The temperature sensor should be powered.
2. Connect the analog input pin to the appropriate microcontroller pin.
3. Point the temperature sensor at a temperature source and record analog values versus the temperature reference (the DMM's temperature probe).
4. Create an equation that translates the analog input to a temperature value.
5. For added integration, you can test these values to the LED 7-segment display.

The temperature values are taken into the microcontroller sent through the XBee modules. Figure 7.3.1 show our test setup to determine this sensor's true sensitivity curve, since the one in the data sheet was off. Figure 7.3.2 shows our new temperature sensor sensitivity curve. The red dots represent our collected data points and the blue line represents the equation we used in the code.

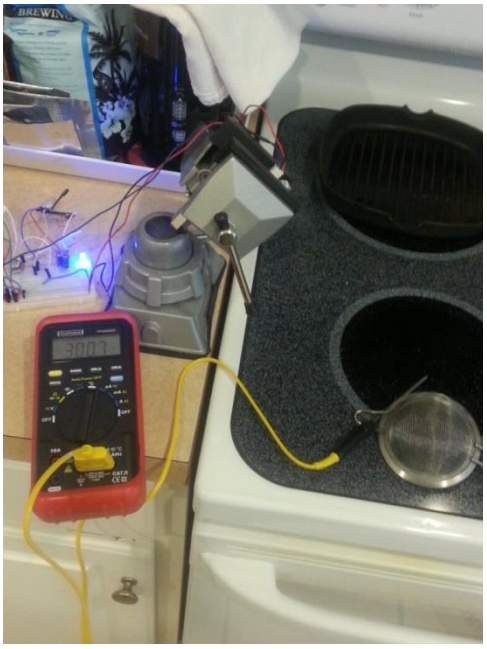

Figure 7.3.1 - At-home Test Setup

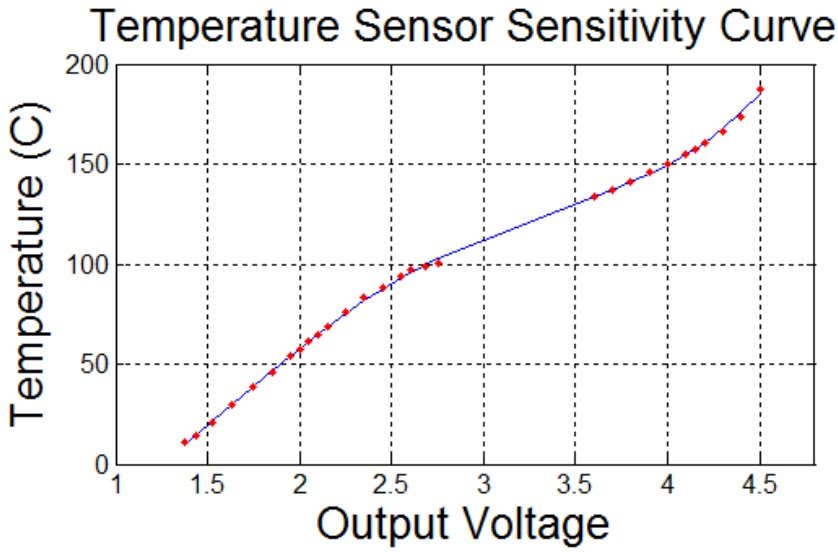

Figure 7.3.2 - Temperature Sensor Sensitivity Curve

Relay Test

Purpose and Objective: This is a very important test, for it allows the oscillator to be turned on and off, essentially allowing charging of the battery to happen or not. The microcontroller must be able to activate the relay.

Supplies:

- Microcontroller
- Development Board
- Power Distribution circuit, with switch (set up prior)
- Resistor and LED
- Power Supply
- Communication Interface for Coding (Arduino IDE)

Procedure:

1. Once everything is setup, connect a control line to the relay from an appropriate microcontroller pin.
2. The value that will be determining the status of the controlling pin will be determined from the status of the car's battery, only after meeting certain proximity and XBee conditions.
3. Create a dummy variable that represents the level of charge of the battery and use that to control the relay. Fully charged means turn the relay off; under-charged means turn the relay on.
4. The resistor and LED should be connected to the output of the switch, so if activated, it will turn on.

The relay is working if the LED is turned on and off, which represents the flow of power being turned on and off to the oscillator and fans.

Battery Voltage Testing

Purpose and Objective: The car system's microcontroller needs to be able to read the voltage of the car battery to determine its state of charge. This data is relayed back to the ground system and displayed. In our design, the wires that determine the voltage of the battery come from the voltage divider circuit. This test is to make sure the voltage of the battery itself can be read via analog wires connected to the microcontroller.

Supplies:

- Microcontroller
- Development Board
- Battery with accessible terminals (set up prior)
- Power Supply
- Communication Interface for Coding (Arduino IDE)

Procedure:

1. Connect the battery to the voltage divider circuit, and connect the analog wire to the appropriate microcontroller pin.
2. Write code to read this pin and determine an absolute value, then create an output in terms of percentage of battery life.
3. This value will be sent through the XBee and be used for display to the LED bar display and control in the ground circuit. Therefore extended tests may be performed to simulate the flow of this data.

This is a crucial test for it will determine the voltage of the battery for charging, thus allowing all other systems to react to it. Figure 7.3.3 shows our voltage divider curve. Red represents our collected data from the voltage divider circuit, and blue represents the voltage divider equation that was implemented in our code.

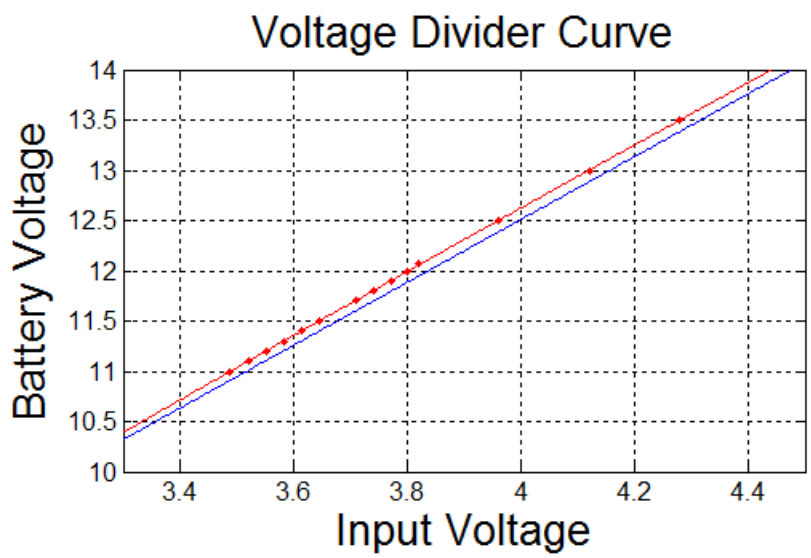

Figure 7.3.3 - Voltage Divider Curve

7.4 XBee Testing

There are two XBee modules in this project communicating between each other. One is housed in the ground system and the other in the car system. These tests are necessary to ensure properly functioning modules.

Communication and Connectivity
Purpose and objective: We need to ensure that there is a good communication between both XBee modules. Data collected from the car must always make it to the control panel's microcontroller with guaranteed integrity. In the procedure below the car's XBee module will be sending data to the ground's XBee module.

Supplies:
- Microcontroller
- Development Board
- Breadboard (optional)
- Power Supply
- Communication Interface for Coding (Arduino IDE and X-CTU)
- XBee Modules

Procedure:
1. Ensure that both modules are connected to each other (same channel).
2. Have the Car system XBee module send data signal to the Ground system XBee module.
3. Confirm reception of data, either with LEDs or through serial screen.
4. Repeat but switch the receiver and transmitter.

If the above does not work accordingly then communication is flawed and must undergo troubleshooting.

Security Testing
Purpose and Objective: We need to ensure that no other XBee device can be connected to any of our XBee modules. Any interference by another XBee device whether intentional or unintentional may cause unwanted conditions in the charging system.

Supplies:
- Microcontroller
- Development Board
- Breadboard (optional)
- Power Supply
- Communication Interface for Coding (Arduino IDE and X-CTU)
- XBee Modules

Procedure:

1. Program the XBees for a custom channel (channel 2498).
2. Connect the respective XBee modules to their microcontrollers and power everything.
3. Using the ATMEGA32P's serial functions, code writing and reading data between the two modules.
4. Repeat but switch one XBee to another channel.

If data is not sent while the XBees do not share the same channel, then the test is successful.

8 Administrative Content

8.1 Milestones

Table 8.1.1 outlines our milestones from the beginning of our project. Sections 1, 2, and 3 represent our first semester, up until the due date of our first draft paper on December 2, 2013. Sections 4, 5, and 6 represent the second semester, the construction of our project, which ended with our presentation at the end of April.

Table 8.1.1 – Outline of our milestones

Task Name	***Duration***	***Start***	***Finish***
1) Definition	**2 weeks**	**Sept 3rd 2013**	**Sept 9th 2013**
➢ Define project	2 weeks	Sept 3rd 2013	Sept 9th 2013
2) Research	**8 weeks**	**Sept 16th 2013**	**Nov 10th 2013**
➢ Type of Vehicle	2 weeks	Sept 16th 2013	Sept 29th 2013
➢ Wireless Com	3 weeks	Sept 16th 2013	Oct 6TH 2013
➢ Temperature Sensor	3 weeks	Sept 16th 2013	Oct 6TH 2013
➢ Charge Controller	2 weeks	Oct 7th 2013	Oct 20th 2013
➢ Volt Meter	3 weeks	Oct 7th 2013	Oct 28th 2013
➢ Type of Coil	3 weeks	Oct 13th 2013	Oct 30th 2013
➢ Display	3 weeks	Oct 13th 2013	Oct 30th 2013
➢ Proximity Sensor	3 weeks	Oct 13th 2013	Oct 30th 2013
➢ MCU	3 weeks	Oct 21st 2013	Nov 10th 2013
3) Design	**6 weeks**	**Oct 6th 2013**	**Nov 30th 2013**
➢ Hardware			
• Oscillator	6 weeks	Oct 31st 2013	Nov 30th 2013
• Wireless	6 weeks	Oct 6th 2013	Nov 30th 2013
• Charge Controller	6 weeks	Oct 20th 2013	Nov 30th 2013
➢ Software			
• Microcontroller	6 weeks	Nov 11th 2013	Nov 30th 2013
4) Prototype	**11weeks**	**Jan 6th 2014**	**Mar 24th 2014**
➢ Hardware			
• Oscillator	11 weeks	Jan 6th 2014	Mar 24th 2014
• Wireless	11 weeks	Jan 6th 2014	Mar 24th 2014
• Charge Controller	11 weeks	Jan 6th 2014	Mar 24th 2014
➢ Software			
• Microcontroller	11 weeks	Jan 6th 2014	Mar 24th 2014
5) Test	**2weeks**	**Mar 24th 2014**	**April 7th 2014**
➢ Whole System	2 weeks	Mar 24th 2014	April 7th 2014
6) Final	**3 week**	**April 7th 2014**	**April 28th 2014**
➢ Presentation	1 week	April 7th 2014	April 14th 2014
➢ Documentation	2 week	April 14th 2014	April 28th 2014

8.2 Budget/Financial Discussion

Since we are paying out of pocket, we tried to be very frugal in regards to part acquisition and considered services. Figure 8.2.1 shows our initial thoughts on our budget before any part research was done and is very general. Figure 8.2.2 shows a newer budget that is more detailed and based on our research. Figure 8.2.3 shows our final cost for parts and services. For a complete list of parts and services involved see the Appendix.

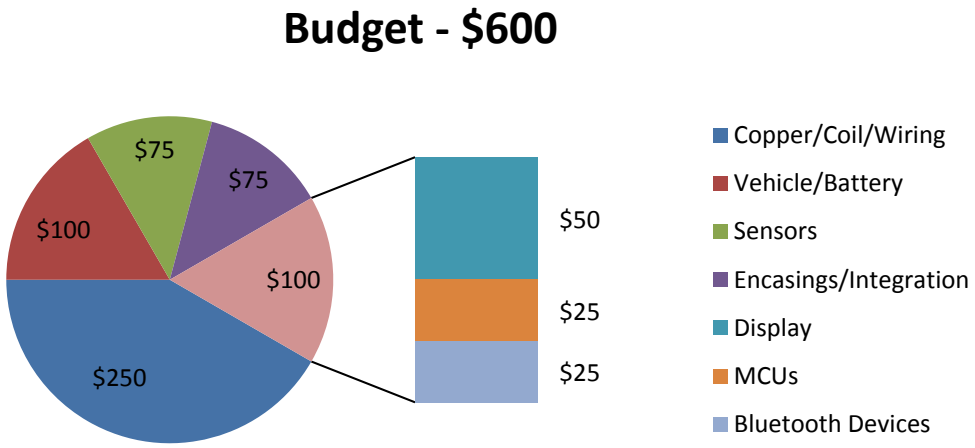

Figure 8.2.1 - Initial Proposed Budget

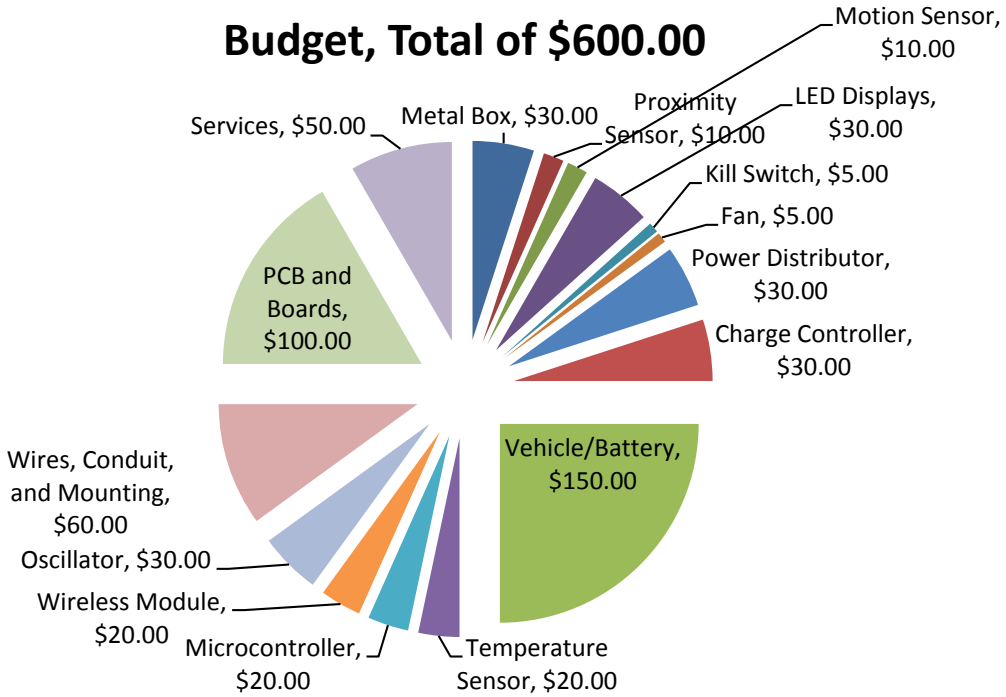

Figure 8.2.2 - Revised Budget as of December 1, 2013

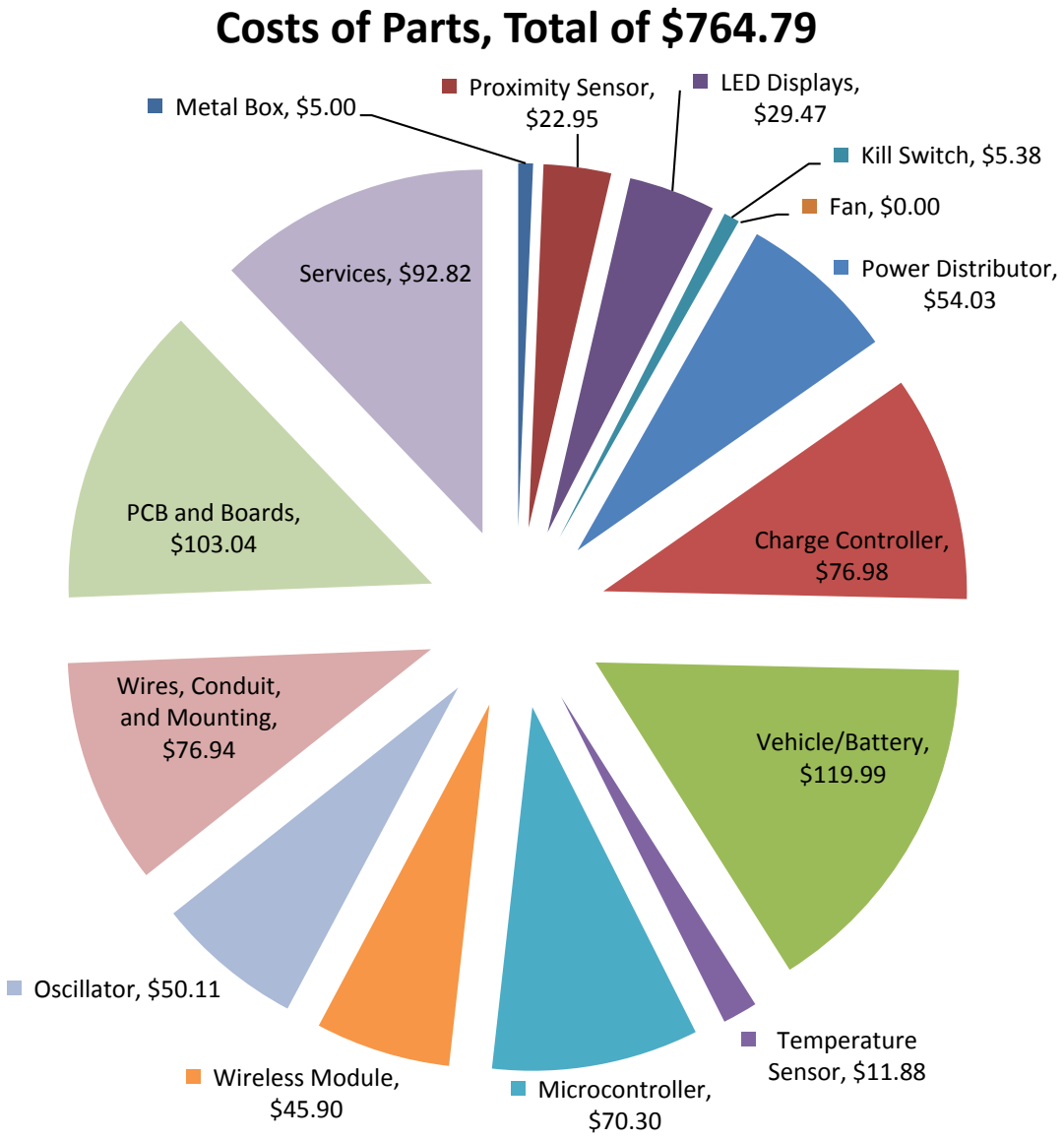

Figure 8.2.3 – Final Cost of Parts as of April 28, 2014

9 Appendix

9.1 Table of Tables

Table 3.5.5.1	WaveShare 4-Digit 8-Segment LED Display Tube Board Module http://dx.com/p/4-digit-8-segment-led-display-tube-board-module-w-point-blue-black-176813
Table 3.5.5.2	Kingbright BA56-12SRWA http://www.mouser.com/ProductDetail/Kingbright/BA56-12SRWA/?qs=SxaZfIVsCL2GBVly1l0tvQ==
Table 3.5.5.3	Adafruit 0.56" 4-Digit 7-Segment Display http://www.adafruit.com/products/1002
Table 3.5.6.1	DPST Push Button Switch http://www.amazon.com/Amico-Mushroom-Emergency-Button-Switch/dp/B0094GM004
Table 3.5.7.1	Cooling Fan (EC8010LL05E) http://www.newegg.com/Product/Product.aspx?Item=N82E16835119129&Tpk=EC8010LL05E
Table 3.5.8.1	Power Distributor Components List PMR27k100 SkyCraft LM7812 http://www.mouser.com/ProductDetail/Fairchild-Semiconductor/LM7812CT/?qs=sGAEpiMZZMtUqDgmOWBjgC5jv%252bsRCBsGZyYOsz27OnY%3d LM7805 http://www.mouser.com/ProductDetail/Fairchild-Semiconductor/LM7805CT/?qs=sGAEpiMZZMtdAabcSkQOlwJydEoyhc9b LM3940 http://www.mouser.com/ProductDetail/Texas-Instruments/LM3940IS-33-NOPB/?qs=sGAEpiMZZMvu8NZDyZ4K0RCH7yDxBCEJ
Table 3.5.8.2	Transformer (166P18) SkyCraft

Table 3.5.9.1	Charge Controller Components List
Table 3.5.10.1	Batteries and Chargers from Fischer-Price http://www.fisher-price.com/fp.aspx?e=search&N=0&Ntk=Products&Ntx=mode%2Bmatchany&Nr=171&st=900000&Ntt=powerwheels
Table 3.5.11.1	GE Sensing ZTP-115 http://www.digikey.com/product-detail/en/ZTP-115/235-1346-ND/446799?WT.mc_id=PLA_446799
Table 3.5.11.2	Thermistor Sensor Surface-Mount Stick-On (SA1-TH-44000 Series) http://www.omega.com/pptst/SA1-TH-44000.html
Table 3.5.11.3	GE Sensing ZTP-115M http://www.mouser.com/ProductDetail/GE-MC-NovaSensor/ZTP-115M/?qs=sGAEpiMZZMvPLCW7ruiZXv5UBy3UHzn5srgnzKsfxUI%3D
Table 3.5.12.1	Atmel ATMEGA32P http://www.mouser.com/ProductDetail/Atmel/ATMEGA32A-PU/?qs=sGAEpiMZZMvnwheKzbT%252bF%2fUkeb%2fIhzVI
Table 3.5.12.2	TI 595-MSP430F5529IPN http://www.mouser.com/ProductDetail/Texas-Instruments/MSP430F5529IPN/?qs=sGAEpiMZZMsp%252bcahb6g%252bW5GRVF96zD1p3cdRJ47A0tA%3d
Table 3.5.12.3	Atmel ATXMEGA64A4U-AU http://www.mouser.com/ProductDetail/Atmel/ATXMEGA64A4U-AU/?qs=sGAEpiMZZMsrb0xF%2fYczNw6pPTLsFZw3LtTyE5HqpqM%3d
Table 3.5.13.1	RN41-XV Bluetooth Module https://www.karlssonrobotics.com/cart/RN41-XV-Bluetooth-Module-Chip-Antenna/
Table 3.5.13.2	BC04-B Bluetooth Module http://www.alibaba.com/product-gs/1341340611/BC04_B_Bluetooth_module.html
Table 3.5.13.3	XBee Module Series 1 https://www.sparkfun.com/products/11215
Table 3.5.14.1	10 AWG Solid Copper Conductor http://www.ebay.com/itm/10-gauge-AWG-Green-Ground-Wire-50-ft-Solid-Copper-UL-Listed-CABLE-SATELLITE-/151083682236
Table 3.5.14.2	3/8in Copper Tubing http://www.ebay.com/itm/3-8-INCH-BY-50-FEET-ROLL-REFRIGERATION-HVAC-COPPER-TUBING-/231034134240?pt=LH_DefaultDomain_0&hash=item35cab51ee0
Table 3.5.14.3	Litz Wire http://www.ebay.com/itm/Litz-wire-660-46-for-crystal-radio-coil-Loop-anten-60-/160428065987?pt=LH_DefaultDomain_0&hash=item255a4204c3
Table 3.5.14.4	Aluminum http://www.ebay.com/itm/39-Ft-Silver-Aluminum-Craft-Wire-12-Gauge-Jewelry-Making-Beading-Wrapping-/140976317160?pt=LH_DefaultDomain_0&hash=item20d2d7e2e8

Table 3.5.15.1	Oscillator Components List 1N4740A http://www.mouser.com/ProductDetail/Fairchild-Semiconductor/1N4740A/?qs=sGAEpiMZZMtQ8nqTKtFS%2fD313Kx94AdFYpyoBaIVrwg%3d BYV26E http://www.mouser.com/ProductDetail/Vishay-Semiconductors/BYV26E-TAP/?qs=sGAEpiMZZMtbRapU8LlZD0OYaqOCagf0iiwRcz8lGpY%3d IRF2807 http://www.mouser.com/ProductDetail/International-Rectifier/IRF2807PBF/?qs=sGAEpiMZZMshyDBzk1%2fWi5%252bqVgN3%252bWS8amFH3ptirs4%3d LM7812 http://www.mouser.com/ProductDetail/Fairchild-Semiconductor/LM7812CT/?qs=sGAEpiMZZMtUqDgmOWBjgC5jv%252bsRCBsGZyYOsz27OnY%3d
Table 3.5.16.1	Non-Metallic Conduit
Table 3.5.16.2	Halex 1/2in Liquid Tight Connector
Table 3.5.16.3	½ in. One hole Conduit Clamps
Table 3.5.16.4	2 Gang Weatherproof Electrical Outlet Box and Cover
Table 3.5.17.1	Buck Converter Part List
Table 4.6.1	Design 1 Parts Reference
Table 4.6.2	Design 2 Parts Reference
Table 5.1.1	Ground System Power Nodes
Table 6.1.1	Specific Parts List Summary *Refer to Tables 3.6.x.x for specific part links*
Table 7.2.1	Power Efficiency Test results
Table 8.1.1	Outline of our milestones

9.2 Table of Figures

9.3 Detailed Budget

Component	Vendor	Manuf	#	$/Unit	Total
Steel Junction Box	SkyCraft		1	$5.00	$5.00
IR Distance Sensor	Adafruit Industries	Sharp	1	$15.95	$15.95
Ultrasonic Ranging Detector	Amazon	SainSmart	1	$7.00	$7.00
RK115FCUL00A Motion		Rokonet	0	$54.45	$0.00
74154N	Mouser	Texas Instruments	2	$4.15	$8.30
74F04N	Mouser	Texas Instruments	4	$0.69	$2.76
Green,Red,Blue LEDs	Amazon	Bluecell	3	$4.11	$12.33
Kingbright BC56-12SRWA	Mouser	Kingbright	1	$3.56	$3.56
74HC595N	Mouser	Texas Instruments	4	$0.63	$2.52
DPST Push Button Switch	Amazon	Amico	1	$5.38	$5.38
Cooling Fans			0	$9.99	$0.00
LM338K	Mouser	STMicroelectronics	1	$9.53	$9.53
50SQ080	Mouser	Vishay	4	$3.34	$13.36
LM7805	Mouser	Fairchild	2	$0.69	$1.38
LM3940	Mouser	Texas Instruments	2	$2.10	$4.20
1N4007	Mouser	Fairchild	4	$0.14	$0.56
Transformer	SkyCraft		1	$25.00	$25.00
Potentiometer 5/8"	Mouser		1	$9.25	$9.25
2N3904 Transistor	Mouser		3	$0.33	$0.99
1N4148 Diode	Mouser		1	$0.10	$0.10
P600G Rectifier	Mouser		1	$0.59	$0.59

FQP27P06 MOSFET	Mouser		1	$1.21	$1.21
RA-T2X-38E Heat Sinks	Mouser		1	$2.28	$2.28
1712041 Terminal Blocks	Mouser		2	$3.51	$7.02
T42-1/C Circuit Board H/W	Mouser		1	$11.19	$11.19
ELC-15E680L Fixed Induct	Mouser		1	$3.27	$3.27
SB540 Schottky Diode	Mouser		1	$0.34	$0.34
LM2596SX Adj VR	Mouser		1	$4.53	$4.53
LM2596T Adj VR	Mouser		2	$4.53	$9.06
1N5820 Schottky Diode	Mouser		2	$0.49	$0.98
B78108S1224J Fixed Induct	Mouser		2	$0.45	$0.90
BZX55C6V2 Zener	Mouser		2	$0.10	$0.20
91A1A Potentiometer	Mouser		1	$5.04	$5.04
1N4148 Diode	Mouser		2	$0.10	$0.20
P600G Rectifier	Mouser		1	$0.59	$0.59
FQP27P06 MOSFET	Mouser		2	$1.21	$2.42
2N3904 Transistor	Mouser		6	$0.33	$1.98
BQ24450DW Charge Con	Mouser		2	$7.42	$14.84
PowerWheels	For Sale by Owner	Fischer-Price	1	$80.00	$80.00
12V 18Ah Battery	eBay		1	$39.99	$39.99
ZTP-115M Temp Sensor	Mouser	GE Sensing	1	$11.88	$11.88
ATXMEGA64A4 U-AU	Mouser	Atmel	2	$4.13	$8.26
ATMEGA328p	Amazon	Atmel	3	$3.95	$11.85
Arduino Uno Replacement	Radio Shack		1	$37.44	$37.44

XBEE Series 1	Adafruit Industries	XBEE	2	$22.95	$45.90
16MHz Crystal	Amazon	Amico	1	$6.19	$6.19
DPDT Switch	Mouser	NEC	1	$3.09	$3.09
DPDT Switch - 5V	Mouser	Omron	1	$3.47	$3.47
1N4740A	Mouser	Fairchild	2	$0.23	$0.46
BYV26E	Mouser	Vishay	2	$0.66	$1.32
IRF2807	Mouser	International Rect	2	$2.81	$5.62
LM7812	Mouser	Fairchild	2	$0.71	$1.42
Miscellaneous	SkyCraft		1	$16.77	$16.77
Miscellaneous	SkyCraft		1	$24.52	$24.52
10AWG Solid Copper (50ft)	Home Depot		1	$0.00	$0.00
Non-Metallic Conduit	Home Depot		1	$0.00	$0.00
Halex Connector	Home Depot		2	$0.00	$0.00
PVC Conduit Clamps	Home Depot		5	$0.00	$0.00
Electrical Outlet Box/Cover	Home Depot		1	$0.00	$62.26
MDF Board	Home Depot		1	$6.68	$6.68
Ribbon Cable	SkyCraft		1	$5.00	$5.00
Screws & Nuts	Home Depot		2	$1.50	$3.00
Perforated Board	Amazon		1	$9.99	$9.99
Perforated Board	Radio Shack		1		$0.00
DB15 PCB connections	Amazon		2	$3.29	$6.58
Capacitor Kit	Amazon	Elenco	1	$10.02	$10.02
Fuse and Clips	Mouser		1	$1.29	$1.29

28pin header 2.54mm	Mouser	3M	4	$0.51	$2.04
10 pin header 2mm	Mouser	3M	4	$1.50	$6.00
PushButton Switches	Mouser	Schurter	4	$0.28	$1.12
PCB Manufacturing	4PCB		2	$33.00	$66.00
Documentation Printing			0	$60.00	$0.00
Conference Printing			1	$5.00	$5.00
4PCB S&H			1	$39.74	$39.74
eBay S&H			1	$3.01	$3.01
Amazon S&H			1	$16.96	$16.96
AdaFruit S&H			1	$8.15	$8.15
Mouser S&H			1	$19.96	$19.96
Total				$87.82	$764.79